Investigation of the Effect of Turboexpander on NOx Emissions

Manuscript received July 16, 2024; revised October 22, 2024

Farheen Fayaz
School of Computing and Engineering
University of Huddersfield
Huddersfield, United Kingdom
farheen.fayaz@hud.ac.uk

John Allport
School of Computing and Engineering
University of Huddersfield
Huddersfield, United Kingdom
j.m.allport@hud.ac.uk

Jordan Brace
School of Computing and Engineering
University of Huddersfield
Huddersfield, United Kingdom
jordanbrace39@gmail.com

***Abstract*—As climate changes become more severe and the transition towards sustainability goals more important than ever, the need to modify our vehicles and their thermal management systems takes priority. The vast majority of Original Engine Manufacturers might be looking at the electrification of most vehicles, but it is equally important to make sure that our Internal Combustion Engine powered vehicles become more sustainable since most of our heavy transport is powered by ICEs. The biggest disadvantage of an ICE-powered vehicle is its emissions output. The engine emissions regulations have become stringent over the past few years leading to an increased emphasis on NOx reduction techniques. Air Cycle Technology (ACT) has created a novel form of turboexpander which has previously been tested by ACT in race car engines to reduce pre-ignition. This current work being reported has been carried out to prove the useability of the ACT turboexpander in diesel engines to reduce NOx formation by cooling the intake air. The engine used for this study is a 4.4-liter JCB-TCA 74 turbocharged diesel engine. The ACT turboexpander was retrofitted to the JCB engine. During the study performed on the JCB engine, second-stage cooling provided by the turboexpander showed a reduction of approximately 30° C in intake air temperatures. This data was also supported by hand calculations performed using empirical formulas.**

Keywords— emissions, diesel engines, NOx, turboexpander

I. INTRODUCTION

The most important issue faced by all sectors at present is sustainability. Sustainability has a part to play in all aspects of our lives, from recycling the waste output from our homes to moving from non-renewable energy sources to renewable energy sources. All this is being done to save the planet from further deterioration. One of the common issues leading up to climate change and environmental damage is emissions. Vehicle emissions have been a matter of concern for a long time. During the 1970s, people started becoming more aware of the environmental problems and it was during this period that there was an energy crisis [1]. Broadly speaking, carbon emissions, NOx emissions, and particulate matter. Each of these compounds has a different effect on the environment but altogether they lead to worse air quality, health impediments, environmental hazards, and much more. Net zero is one of the terms most used to refer to the overall reduction in the emissions occurring from all sectors to gain very little to no emissions. One of the strategies moving forward is electrification of the future technologies, including vehicles, factories, and manufacturing plants, and reducing industrial waste from such places. As good an effort this is, it is equally important to ponder upon the infrastructure that is already in place and has been in place for decades. This includes older vehicles (light and heavy duty), and rail engines among others.

Light vehicles or passenger vehicles are already catching up to speed in terms of electrification and producing hybrid vehicles. Much research and development has already been put in place to support this. However, heavy-duty vehicles are still quite behind when it comes to sustainability and electrification. Although, research is being carried around bringing new heavy-duty vehicles onto the road sooner, however most of the fleet of such vehicles that are already on the road run on traditional internal combustion engines. Internal combustion engines consist of gasoline engines and diesel engines. Modern, well-maintained engines generally emit low levels of CO and HC due to significant design improvements in recent years. Even without those advances, the universal use of catalytic converters on petrol engines since the early 1990s has reduced their harmful emissions practically to zero [2]. The nature of diesel engine combustion means that they naturally produce much lower levels of some of these pollutants anyway. Heavy-duty vehicles are mostly diesel engines. To use these vehicles on the road, they need to comply with the emissions regulations so that much harm is not caused to the environment.

A very important consideration whilst going towards net zero would therefore be to reduce the emissions from the vehicles already on the road. Research in the field of internal combustion engines has traditionally aimed to enhance engine efficiency. Every alteration made to automobiles has typically led to improvements in either efficiency or performance. However, these performance enhancements often come at a price, with increased emissions being one of the most detrimental consequences. In recent years, this overarching objective has been transforming, largely due to the pressing issues of climate change, sustainability, and net zero emissions. Transport, particularly road transport, has been identified as a significant contributor to environmental pollution, releasing substantial amounts of particulate matter, NOx, CO, and other pollutants [3]. This study focuses specifically on heavy-duty diesel engines, which are known for their high fuel efficiency, reliability, and durability. However, in terms of emissions, diesel engines produce higher levels of oxides of nitrogen (NOx) compared to spark ignition engines [4].

Prolonged exposure to NOx can lead to severe lung damage in humans. To meet emission control regulations, vehicles have implemented various NOx reduction techniques, such as fuel blending, engine design modifications, NOx filters, exhaust gas recirculation, and

 EISSN: 2961-872X ● PISSN: 2961-8924 ● DOI:10.56741/esl.v4i01.678

catalytic converters [5]. One effective approach to reducing engine emissions is by lowering the intake charge air temperature.

This study aims to investigate the impact of turboexpanders on diesel engines, specifically focusing on using them to cool intake air below ambient temperature, thereby reducing combustion temperature and NOx emissions. The research will be conducted using theoretical principles, followed by testing the data against lab results followed by using a simulation software package [6] to evaluate engine performance parameters before practical implementation.

A. Formation of NOx in Diesel Engines

Diesel engines are known to be more efficient than gasoline engines with a lower fuel consumption resulting in a wide-ranging application in the heavy-duty transportation industry. However, they are known to produce high amounts of NOx as well [7].

The primary oxide of nitrogen formed in diesel engines is nitric oxide (NO) [8]. This reaction is highly dependent on the temperature, thereby meaning that as the temperature becomes hotter, more NOx is formed [9]. Therefore, it is produced directly from the existence of nitrogen and oxygen in the air at elevated temperatures, conditions easily present in a compression ignition engine. The formation of NO in diesel engines is activated by atomic oxygen. The atomic oxygen needed for the reactions to take place is generated during high-temperature combustion in diesel engines [8].

The formation of NO2 is mostly subject to an availability of free radicals of oxygen, which means that the amount of NO2 formed is mostly scant. This reaction can be shown below using the Zeldovich equations [8]:

$$O_2 = 2O \quad (1)$$

$$N_2 + O = NO + N \quad (2)$$

$$N + O_2 = NO + O \quad (3)$$

$$N + OH = NO + H \quad (4)$$

NO is formed in all regions of the combustion chamber however the concentration is predominantly high in the areas of high temperature and high oxygen concentration [8].

B. Turbocharging a Diesel Engines

Ever since the internal combustion engine was first developed in the 1860s [10], there have been numerous advancements in the design and subsequently the performance of the engines. Some of the notable differences are in terms of their efficiency and emissions levels [10]. Automotive companies strive hard to make these parameters better day by day. One such way of doing so is decreasing the charge air temperature whilst increasing the density of charge air. Increasing the density of the intake air is the primary role of a turbocharger [11]. Exhaust gas turbocharging began to be employed commercially in vehicles in the 1960s to increase power and reduce fuel consumption during those times [1]. The basic working principle of a turbocharger is that it takes in air at ambient temperature and passes it through the compressor inlet. Air undergoes compression in the compressor, leading to an increase in the density of the air to increase the volumetric efficiency. This dense air leaves the compressor and passes through an intercooler, which reduces its temperature allowing greater volume to be admitted to an engine. Intercoolers play a crucial role in regulating the cylinder combustion temperature in turbocharged engines [12]. The increase in density is accompanied by an increased temperature, therefore a charge air cooler is used to decrease the temperature of the air. A turboexpander can be introduced into the model after a heat exchanger to further decrease the temperature of charge air. Dictionary of Energy mentions the turboexpander as a machine that is capable of expanding fluids resulting in decreasing fluid pressure [13]. Now, if a turboexpander is installed into the system, it will cool the intake air while increasing the density of the charge air temperature. The flow path of the engine can be shown in Fig. 1.

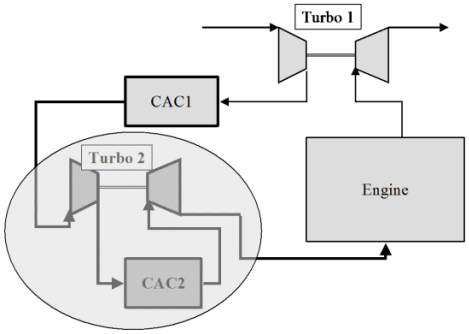

Fig. 1. Charge Air Cooling Schematic [14]

II. METHODOLOGY

The Air Cycle Technologies' turboexpander is a flexible cooling system component based on a validated Simcenter AMESim digital twin [6]. The ACT turboexpander shown in Figure 2 is used to deliver charge air cooling simply by passing the compressed air through the compressor of the turboexpander to re-compress the charge air, followed by passing it through the second charge air cooler to further reduce the temperature of the charge air before it enters the intake manifold [14]. See Fig. 2 for the ACT Turboexpander.



Fig. 2. ACT Turboexpander

A. Hand Calculations

The first step towards testing the theory was implementing basic thermodynamic laws to verify if the machine abides by these known laws. Therefore, important data including pressure, temperature, density and vehicle power, torque, specific fuel consumption, etc. were calculated. According to the results acquired, it was proven that the ACT turboexpander was very well capable of reducing the temperature at which the charge air entered the engine manifold. This in turn reduced the NOx emissions by

a huge amount. The drop in the NOx emissions had to be further tested in practice on the test rig.

B. *Testing*

The engine used for this testing is a JCB 444 Turbocharged aftercooled diesel engine referred to as 444 IPU T3 TCA-74. Figure 3 shows the test cell setup of the JCB TCA-74 engine, with the engine in the center, the cooling tower, intercooler, and heat exchanger to the left and the dyno and link shaft to the right. The ACT turbo-expander was then fitted to the JCB engine for testing. See Fig. 3.



Fig. 3. Test Cell Setup

A secondary cooling tower was moved into the test cell and a mounting post was made for the turbo-expander to sit on with a rubber isolation mount. In the test setup, the air leaves the turbocharger charge cooler and enters the turbo-expander compressor then passes through the cooling tower which acts as the second charge cooler, the air is then passed through to the turbo-expander turbine and then round into the intake manifold. The second cooling tower is set up in series with the first cooling tower to allow the water to flow around both. The second cooling tower water flow is also controlled by a valve, this valve can be set at a percentage open or closed manually during the testing. New sensors were also placed on the engine to allow collection of the properties of the air, before the turbo-expander compressor, after the turbo-expander compressor, and after the second charge cooler.

C. *Modelling the system on Simcenter AMESim*

Complexities in vehicles are increasing with stricter emission standards and performance targets. To meet these standards, testing of new changes and components for engine sub-assemblies cannot be done on prototypes each time. A Systems approach needs to be followed to test components and optimize them further. One such simulation software used by industries for system testing is Simcenter AMESim. This software is different from other software packages as it allows the designer to investigate various domains of a vehicle with the right level of detail [15]. AMESim is a very sophisticated software package wherein all the sub-models and parameters are based on previous research conducted in the subject area. This gives the surety that the data obtained from any simulation run is of the highest quality possible. Every element within the library of AMESim has a properly researched help section to provide every detail about the component.

After some successful empirical testing in parallel research showing promising results i.e., a significant decrease in the NOx emissions, this study entails moving ahead on the same path by modeling the engine with its parameters in Simcenter AMESim.

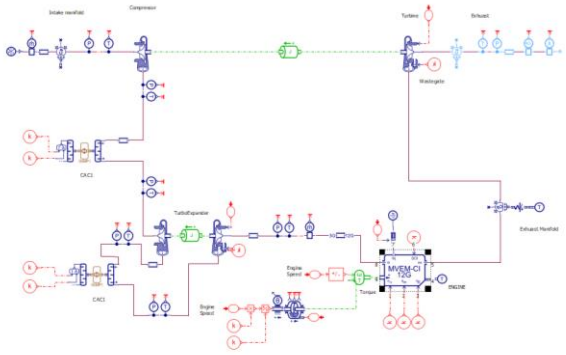

Fig. 4. Turbocharged engine with turboexpander model on AMESim.

Fig. 4 shows a completed model of a JCB 4.4 liter turbocharged diesel engine fitted with Air Cycle Technologies Turboexpander. After successful modeling, the first step for a successful run was to match the turbocharger properly to simulate the real engine. Upon matching the turbocharger successfully, data was collected from the baseline model. The results from the model were validated against the test results and the reference data from the JCB handbook. The values used to validate the model are mainly peak power, peak torque, and mass flow rate through the engine. Upon validating the data, an error margin was determined between the test data and the simulated data. The results acquired through the simulation show a near match between the simulated model and the real-life engine. This confirms the suitability of our baseline model to be used for further work.

III. Results and Discussion

In each of the three methods, the first set of results was gathered from baseline testing without a turboexpander, followed by fitting the turboexpander onto the engine and taking the readings again. During the baseline tests the emissions equipment required zero calibration, this meant pausing the engine test removing the exhaust gas tube from the analyzer, and allowing the emissions tester to calibrate. This occurred at different points of each of the three tests due to the emissions equipment not always having a consistent period.

A. *Temperature*

The temperature of the air entering the intake manifold was monitored in each of the tests. This was done as the intake manifold temperature directly affects the combustion temperature. Temperature placed after every component in the model is used to record the temperature data at various stages. This allowed measuring the temperature after the intake charge air before entering the intake manifold in the baseline engine and engine with turboexpander as well. This data is presented in Fig. 5.

 EISSN: 2961-872X ● PISSN: 2961-8924 ● DOI:10.56741/esl.v4i01.678

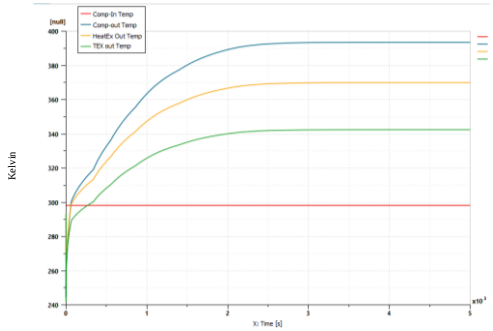

Fig. 5. Output temperature data collected by sensors at various stages in the engine.

B. NOx Emissions

The main objective of this work is to reduce the NOx emissions from the diesel engine to contribute towards the net-zero goal and achieve sustainability. This reduction in the intake manifold temperature is what was required to give a reduction in combustion temperature to reduce NOx emissions.

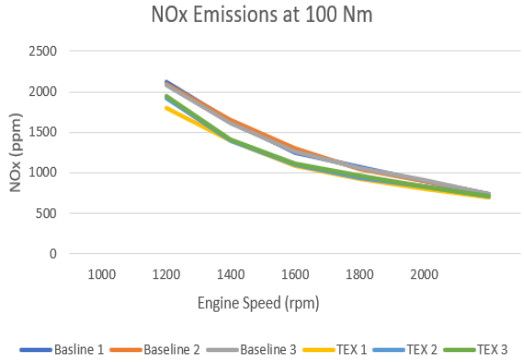

Fig. 6. NOx Emissions comparison at 100 Nm.

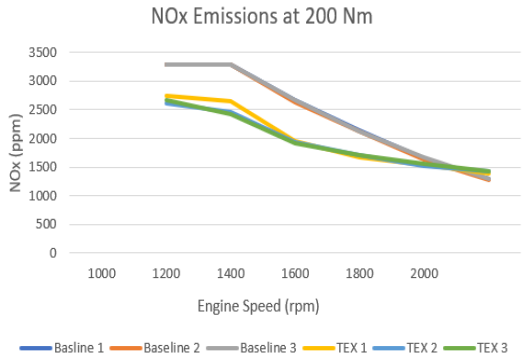

Fig. 7. NOx emissions comparison at 200 Nm.

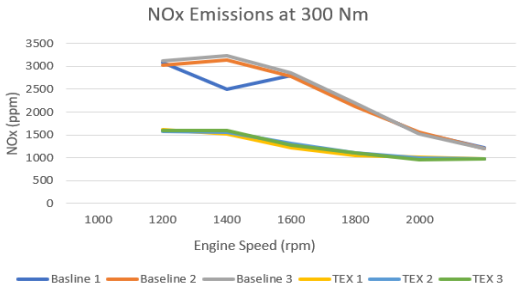

Fig. 8. NOx emissions comparison at 300 Nm.

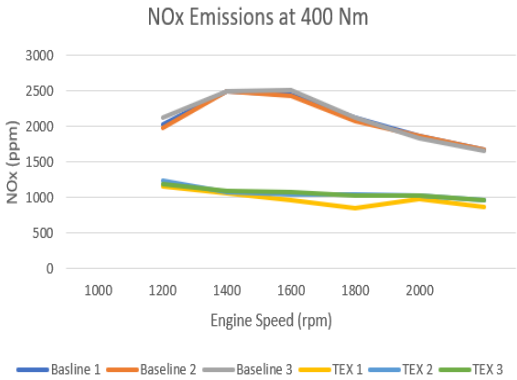

Fig. 9. NOx emissions comparison at 400 Nm.

Fig. 6 shows that NOx emissions have slightly reduced at less load, which is 100 Nm. The difference between the engine without the turboexpander and with the turboexpander can be seen in graphed data. This reduces as the engine speed increases until the values converge. This trend also occurs through 200 Nm and 300 Nm (Fig. 7 and Fig. 8). At 400 Nm the emissions are very consistent and show a slight decrease as the engine speed increases (Fig. 9). At each load, the NOx emissions reduce due to fitting the turbo-expander, at peak it reduces NOx emissions (see Table I).

TABLE I. PERCENTAGE REDUCTION IN NOX AT DIFFERENT LOADS.

Engine Load (Nm)	Percentage Reduction in NO_X (%)
100	14
200	28
300	57
400	60

This data shows how the percentage of NOx reduces as the engine load increases. This is due to the turbo-expander becoming more efficient as the load increases which increases the airflow through the turbo-expander. This data shows that the ACT turbo-expander reduces NOx emissions throughout the engine speed and engine load conditions.

IV. CONCLUSION

The simulation results attained by the baseline model have proved to be reliable with a close match to the test values and low error percentages. The results have proved that the turboexpander can be effectively used in diesel engines to reduce the temperature of the intake air by a huge margin. This reduction in temperature eventually led to a decrease in the NOx produced by the engine. It can be regarded as a huge development in the automotive industry especially for heavy-duty vehicles, since the technology is retrofittable. The turboexpander used, however, was a custom-made TEX from Air Cycle Technologies. An effective rematch of the turboexpander according to the needs of the engine can provide far better results for the engine of our choice, which in this case is a JCB TCA-74. Thus, turbo expansion can prove to be a reliable method of NOx reduction at source and help vehicles become more energy efficient and clean contributing towards the net zero goal.

REFERENCES

[1] Van Basshuysen, R., & Schäfer, F. (Eds.). (2016). *Internal combustion engine handbook*. SAE International.

[2] Croner-i. (2023). *Control of Emissions from Vehicles: In-depth*. https://app.croneri.co.uk/topics/control-emissions-vehicles/indepth?topic=4097
[3] Waite, C. (2024), *2022 UK Greenhouse Gas Emissions, Final Figures*, National Statistics, United Kingdom, Feb. 2024. Available: https://assets.publishing.service.gov.uk/media/65c0d15863a23d0013c821e9/2022-final-greenhouse-gas-emissions-statistical-release.pdf
[4] Maroa, S. S. (2018). The effects of exhaust gas recirculation (EGR) on the performance of diesel engine (Doctoral dissertation).” Available: https://core.ac.uk/download/pdf/268999168.pdf#page=150
[5] Bindra, M., & Vashist, D. (2020). Particulate matter and NOx reduction techniques for internal combustion engine: a review. *Journal of The Institution of Engineers (India): Series C*, *101*(6), 1073-1082. doi: https://doi.org/10.1007/s40032-020-00607-1.
[6] Siemens. (2020). Can this little turbo-expander help save the planet? – Simcenter. *blogs.sw.siemens.com*. https://blogs.sw.siemens.com/simcenter/can-this-little-turbo-expander-help-save-the-planet/.
[7] Reşitoğlu, İ. A. (2018). NO x Pollutants from Diesel Vehicles and Trends in the Control Technologies. In *Diesel and gasoline engines*. IntechOpen. https://library.oapen.org/bitstream/handle/20.500.12657/43845/1/external_content.pdf#page=173
[8] Watson, N., & Janota, M. S. (1982). *Turbocharging the Internal Combustion Engine*. doi: https://doi.org/10.1007/978-1-349-04024-7.
[9] TMI. (2020). Prompt NOx, fuel NOx, and thermal NOx: The DLE strategy. https://www.turbomachinerymag.com/view/prompt-nox-fuel-nox-and-thermal-nox-the-dle-strategy
[10] Ferguson, C. R., & Kirkpatrick, A. T. (2015). Internal combustion engines: applied thermosciences. John Wiley & Sons. https://books.google.co.in/books?hl=en&lr=&id=Cf8kCgAAQBAJ&oi=fnd&pg=PP1&dq=Ferguson
[11] Guhr, C., & Zellbeck, H. (2012). Turbocharging with low-temperature charge air cooling and EGR. *MTZ worldwide*, *73*(10), 44-52. doi: https://doi.org/10.1007/s38313-012-0226-2.
[12] Muqeem, M., Ahmad, M., & Sherwani, A. F. (2015). Turbocharging of diesel engine for improving performance and exhaust emissions: a review. *Journal of Mechanical and Civil Engineering*, *12*(4), 22-29.
[13] Cleveland, C. J., & Morris, C. G. (Eds.). (2005). *Dictionary of energy*. Elsevier. https://books.google.co.in/books?hl=en&lr=&id=J4w-PsZco2MC&oi=fnd&pg=PR1&dq=Cleveland\
[14] Whelan, C. D., & Allport, J. M. (2017). *Active Charge Cooling*. https://eprints.hud.ac.uk/id/eprint/32001/.
[15] Siemens. (2021). *IFP-Engine library User's Guide*. Simcenter Amesim, Siemens Industry Software.

 EISSN: 2961-872X ● PISSN: 2961-8924 ● DOI:10.56741/esl.v4i01.678