Initial Finding of Material Flow Analysis of Food Waste of Particular Restaurants in Yogyakarta, Indonesia

Manuscript received September 02, 2023; revised September 29, 2023

Siti Mahsanah Budijati*
Industrial Engineering Department
Ahmad Dahlan University
Yogyakarta, Indonesia
Orcid: 0000-0001-6047-5161
mysmbudijati@ie.uad.ac.id

Panji Dwi Setiyawan
Industrial Engineering Department
Ahmad Dahlan University
Yogyakarta, Indonesia
panji1800019073@webmail.uad.ac.id

***Abstract* —Food waste is still a significant problem today. The Special Region of Yogyakarta contributes 96 tons of food waste daily, with the City of Yogyakarta being the most significant contributor. Food industry services in DIY experience a rapid increase every year. Meanwhile, restaurants are the most important contributors to food waste. There are efforts from DLH of Yogyakarta City to manage food waste through the activities of several waste banks. However, many business actors still need to cooperate, which has resulted in food waste ending up in landfills. Efforts are required to manage food waste to overcome this problem. So, it is necessary to conduct research on food waste flow analysis in food service businesses in Yogyakarta. This research aims to determine the type and quantity of food waste produced and provide an overview of the management costs that occur in restaurants. This research uses the material flow analysis (MFA) method by identifying material flow processes so that it can explore the quantity and type of food waste that occurs at the pre-kitchen, kitchen and post-kitchen stages using STAN software and Sankeymatic diagrams and providing an overview of the total costs in food waste management in restaurants. Interviews and direct observation of restaurants in the eastern and southern regions of Yogyakarta City collected data. The analysis carried out is the flow, type and quantity of food waste and the costs incurred in managing food waste in restaurants. The research results in 8 restaurants in Yogyakarta City in the eastern and southern regions showed that total food waste was 617,906 grams/week. The most significant percentage of food waste at the pre-kitchen stage is lime peel (34%), at the kitchen stage is oil (86%) and at the post-kitchen stage is fish bones (30%). The total costs of managing restaurant food waste are IDR 18,615,000.00/month. The results of this research can be used to predict the quantity and type of food waste in the future so that it can be used to plan policies to overcome food waste.**

Keywords— food waste, material flow analysis, reverse logistics, , sankeymatic, substance flow analysis

I. INTRODUCTION

Big countries like Indonesia are unique countries with different diversity in each region. One of the various cultures that makes it interesting is the typical culinary food in the various areas of Indonesia. It is what makes the culinary business highly respected today. It can also cause most people to buy food outside to satisfy curiosity with various culinary delights. The demand for food is increasing, in line with the rise in population yearly. Food waste is one of the problems that must be faced in every country. The high level of food waste generated makes waste management costs even higher. According to the Economist Intelligence Unit (EIU), Indonesia is a country which is the second largest producer of waste in the world after Saudi Arabia (Figure 1). The waste generated can reach 300 kg per person annually [1].

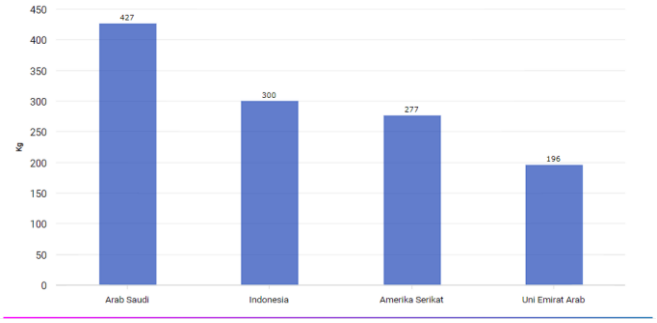

Fig. 1. Graph of Food Waste Generated in Each Country

Food waste is significant to control to prevent harmful impacts on society. Food waste negatively affects several sectors, such as the environmental, economic, and social sectors [2]. The social implications of food waste are the loss caused by wasted food waste, which could have been used for people who need it more. According to the Food and Agriculture Organization (FAO) data, if a quarter of the food currently wasted could be controlled, the world's 870 million hungry people could be fed [3]. The economic impact of excessive food waste is the loss of wasted food. [4] said that food waste losses from the economic sector can reduce farmers' income and increase consumer spending. According to [5], looking from an environmental aspect, food waste affects greenhouse gas emissions, so using water and land could be more optimal, which can cause damage to natural ecosystems.

The Special Region of Yogyakarta (DIY) is one of the provinces in Indonesia which is the choice as a place for tourists to travel. One of the cities that is quite busy with visitors is the Yogyakarta City. Meanwhile, not a few residents of Yogyakarta City choose to buy food compared to cooking at home. It causes an increase in food waste produced every year. Head of *Dinas Lingkungan Hidup dan Kehutanan* (DLHK DIY; Environment Agency) said that food waste in DIY reaches 96 tons every day, with a total of 620 tons of garbage every day that is disposed of by the people of DIY. Food waste is quite large, and Yogyakarta City is still the

 EISSN: 2961-872X ● PISSN: 2961-8924 ● DOI: 10.56741/esl.v2i03.415

most significant contributor, followed by Sleman and Bantul Regencies. According to [6], the most important contributor to food waste produced mostly comes from restaurants. The number of restaurants in Yogyakarta City has increased every year. According to an interview with Ms. CSR, the sub-directorate of the Yogyakarta City Tourism Industry, the number of restaurants has increased significantly in the last two years. In 2022, the number of restaurants skyrocketed; in 2020, there were 266 restaurants; in 2021, there were 286 restaurants; and in 2022, there were 858 restaurants, as shown in Table I.

TABLE I. NUMBER OF RESTAURANTS IN YOGYAKARTA CITY

Element	Year (Unit)			Nature of Data	Data source
	2020	2021	2022		
Number of Restaurants	266	286	858	Annual	Tourism Department

The application of food waste management will significantly assist the government in reducing accumulated waste to become a solution for utilising leftover food waste. The Yogyakarta City Government, especially the DLHK, hopes public awareness will grow in organic waste management. According to DLHK, several business actors have not done waste segregation and reduction. In addition, several business actors still need to partner with the available waste management facilities and infrastructure. It causes the waste to be transported directly to the final disposal site (*Tempat Pembuangan Akhir* or TPA). Benefits derived from good management can maximise revenue, reduce environmental impact and help various parties involved [7].

Food waste is still a problem that causes many losses to various parties. There needs to be an effort to manage food waste so that it can overcome the occurrence of food waste that is wasted. Meanwhile, many business actors still need to collect food waste, which results in the accumulation of food waste in landfills. There still needs to be more research that discusses food waste in food service businesses. Therefore, this study aims to identify the type and quantity of food waste and the processes and costs incurred by food service businesses in managing food waste. Thus, the objectives of this research include:

1. Identify types of food waste in each food production process
2. Quantify food waste generated in every food production process
3. Calculating the costs incurred in managing food waste in a food service business

II. LITERATURE REVIEW

A. Green Supply Chain Management (GSCM)

According to [8], GSCM is a management concept that integrates supply chain management with a way of thinking that prioritises the environment to reduce negative impacts that will occur in the environment. These negative impacts can occur due to the accumulation of waste, emissions, energy and solid waste. According to Ref. [9], reverse logistics (RL) is the activity of processing or utilising the values of products that have reached the end of their useful life. Proper implementation of reverse logistics can minimise operational costs due to recycling or reuse of some product parts to gain profit. As written by Ref. [10], food waste can be avoided. Food waste can be leftover food, wilted vegetables, rotten fruit, and food that has passed its shelf life, which has yet to be eaten or even been opened from the packaging. A restaurant is a place or building formed with an organisational system aimed at commercial use by providing exemplary service to all customers by serving food and drinks [11].

B. Material Flow Analysis (MFA)

According to [12], MFA is an analytical method of systematically assessing material flows in complex systems defined in space and time. MFA has a balance principle as explained in the equation formula:

$$Sum \sum_{k1} input = \sum_{k0} output + storage \quad (1)$$

MFA can measure the percentage of food wasted at each stage of food production in the halal kitchen of an in-flight catering facility that produces Muslim food for corporate airlines [13].

Research conducted by Ref. [14] discusses measuring the amount of food waste by estimating losses related to food wastage. This research aims to measure and quantify the input and output materials related to the food waste of the potato industry in Italy to maximise the utilisation of natural resources and reduce waste production. Researchers use the material flow analysis method for potato-based products, especially ready-to-eat and dried potatoes. Meanwhile, Ref. [15] researched the management of polyvinyl chloride (PVC) waste in Thailand. This research aims to overcome the accumulation of PVC product waste to prevent environmental problems. This research uses the MFA method to estimate the amount and route of PVC waste in Thailand. Research conducted by Ref. [16] discusses improving the management of waste electrical and electronic equipment. This study aims to analyse reams from electrical and electronic equipment in Italy and provide a mass balance of maintenance from equipment categories, namely refrigeration equipment, large household appliances, TVs and screens. This research uses the MFA method. A study conducted by Ref. [17] discusses increasing the recycling of ships that are not reused. This research aims to improve the economy by maximising ship recycling performance. While MFA charts do not directly contribute to reducing recycling costs and increasing revenue, they help determine the maximum revenue potential from recycling a certain number of ships in a given period.

III. METHODS

This research was conducted to determine the type and amount of food waste generated in each food production process and the costs incurred to manage food waste in restaurants. MFA is needed to analyse the material used in each food production flow in the kitchen, including pre- and post-kitchen processes. The MFA approach has the principle of a balance between inputs and outputs, as described in the equation. The research was conducted in restaurants located in the eastern and southern regions of the Yogyakarta City, precisely in 5 sub-districts, namely Gondokusuman sub-district, Kotagede sub-district, Mantrijeron sub-district, Mergangsan sub-district and Umbulharjo sub-district. After visiting restaurants in the five districts, 8 of the 28 restaurants agreed to do the research. This research was conducted through several stages of work.

The first step is interviewing restaurant staff, such as restaurant managers and chefs. Interviews were conducted to

 EISSN: 2961-872X ● PISSN: 2961-8924 ● DOI: 10.56741/esl.v2i03.415

find out the menu that is most ordered every day, the use of food raw materials used from the menu and the food waste management process in the restaurant.

The second step is direct observation of each food production process. This research focuses on the menu that is most ordered every day. Every food production process is weighed using digital scales to obtain quantity data for each food raw material that is wasted or becomes food waste. Measurement of quantity based on units of grams and then calculated into grams per week from the number of menu orders per week.

The third step is to analyse the data collected using the MFA method with the Substance Flow Analysis (SFA) software and visualise it more simply using the Sankeymatic diagram. After that, calculate the total cost of food waste management in terms of labour, storage and transportation. The results from each restaurant will be added based on the complete food waste produced in grams per week.

IV. Results

A. Data Collections

This study uses the menu ordered the most. The favourite menu of each restaurant is shown in Table II. The amount and type of food waste produced are displayed in Table III, and the total cost of managing food waste in restaurants is presented in Table IV.

TABLE II. AVERAGE ORDERS PER DAY IN ONE FAVORITE MENU

No	Restaurant name	Favorite Menu	Average Orders/Day
1	FGS	Special Fried Rice	18
2	KR	Kesuma Chicken	15
3	BB	Grilled Tilapia	80
4	BD	Fried duck	48
5	BTR	Fried Tilapia	55
6	JJW	Fried chicken	30
7	HRWB	Spicy and Sour Grilled Ribs	40
8	CR	Village Chicken Lead Rice	20

TABLE III. TOTAL RESTAURANT FOOD WASTE IN THE EASTERN AND SOUTHERN REGIONS OF YOGYAKARTA CITY

Pre-Kitchen		Kitchen		Post-Kitchen	
Type	**Total (g/ Week)**	**Type**	**Total (g/ Week)**	**Type**	**Total (g/ Week)**
Garlic Skin	4063	Eggshells	3360	Leftover Rice	45360
Shallow Skin	3377	Cooking Oil	226520	Leftover Chicken Meat	5250
Chilli Stalk	5491	Bacem Sauce	31248	Leftover Garnish	8960
Cucumber Base and Skin	10829	Lime Leaves	3192	Fish Bones	86800
Lettuce Base	1092	Bay Leaf	700	Leftover Vegetables	68040
Onion Root	462			Duck Bone	10080
Corn Stem	6300			Chicken Bones	5950
Bean Fringe	630			Rib Bone	49000
Lime Peel	23100			Leftover Tofu and Tempeh	2100
Ginger Base and Skin	1050			Banana Leaf	2800
Turmeric Base and Peel	3192				
Galangal Base and Skin	560				
Carrot Leaves and Skin	1260				
Onion Skins	210				
Cabbage Base	1680				
Basil leaves	1890				
Col Base	2380				
Leunca Trunk	980				

Meanwhile, the percentage of food waste based on process stages, divided into pre-kitchen, kitchen and post-kitchen, is presented in Figures 2 to 4.

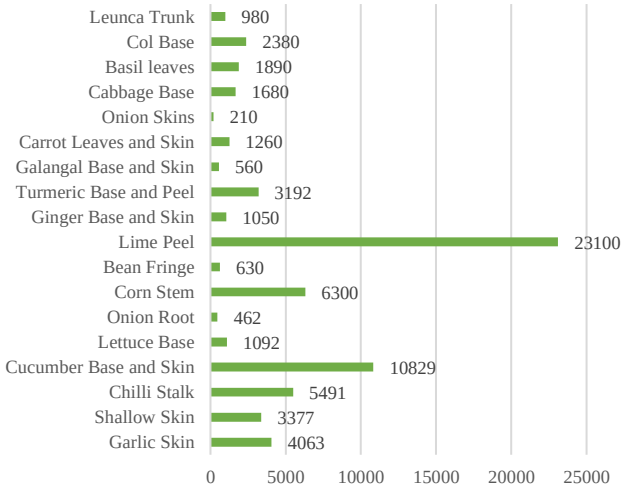

Fig. 2. Overall Percentage of Restaurant Food Waste in the Eastern and Southern Regions of Yogyakarta City in the Pre-Kitchen Section

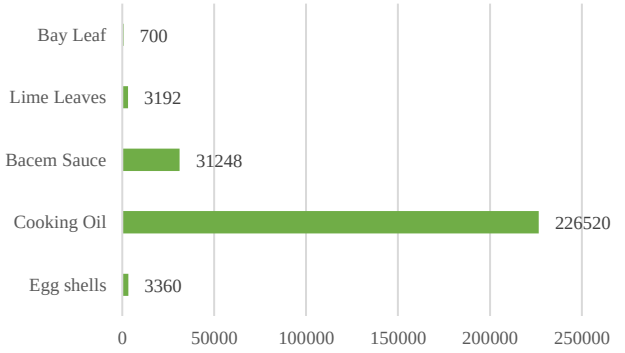

Fig. 3. Overall Percentage of Restaurant Food Waste in the Eastern and Southern Regions of Yogyakarta City in the Kitchen Section

The restaurant has two types of bins: organic and inorganic waste. However, when making food in the kitchen area, there is often a buildup of organic waste and inorganic waste caused by many customer orders, which makes the kitchen staff throw the waste in one place. Each restaurant has a different system; some restaurants separate food waste based on vegetables and animal side dishes to make it easier to provide food waste to those who manage it into fertiliser or animal feed. Some restaurants also only dispose directly to landfills.

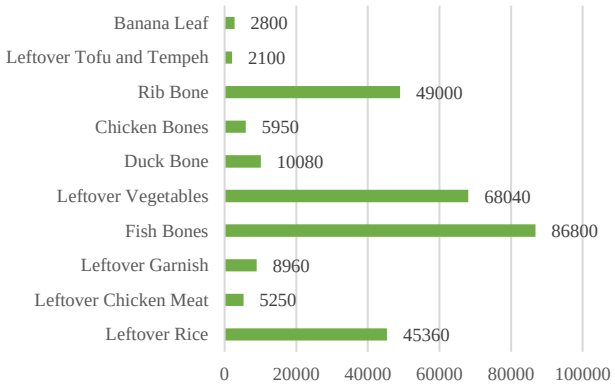

Fig. 4. Overall Percentage of Restaurant Food Waste in the Eastern and Southern Regions of Yogyakarta City in the Post-Kitchen Section

Research conducted at eight restaurants found that four restaurants carried out a sorting process, namely FGS, BB, HRWB and CR. This sorting process requires 2 to 4 workers, depending on the daily waste generated. The following Table IV shows the costs incurred by the restaurant in managing food waste each month:

TABLE IV. TOTAL COST OF FOOD WASTE MANAGEMENT IN RESTAURANTS

Restaurant Code	Labor Cost (IDR)	Storage Cost (IDR)	Transport Cost (IDR)
FGS	1,500,000	100,000	-
KR	-	50,000	30,000
BB	8,000,000	350,000	-
BD	-	100,000	30,000
BTR	-	125,000	50,000
JJW	-	50,000	30,000
HRWB	6,300,000	200,000	-
CR	1,600,000	100,000	-

V. DISCUSSION

A. *MFA Food Waste*

Processing food waste data using STAN software and visualising it as a Sankey Diagram shows the following results. The FGS restaurant produces food waste, which includes the favourite menu, namely special fried rice. The total food waste generated by the FGS Restaurant is 23,751 grams weekly. The restaurant has a sorting system where some of the food waste will be given to third parties for processing food waste into compost. Sorting is done based on leftover vegetables, animal side dishes, and leftover food that still needs to be finished by customers. Animal side dishes and leftover food will be disposed of in a restaurant disposal container and disposed of in a temporary disposal site. The MFA of FGS restaurant is shown in Figure 5.

KR restaurant produces food waste, including their favourite menu, kesuma chicken. The total food waste generated by the KR restaurant is 30,205 grams weekly. The restaurant has a system where all food waste will be collected in containers and disposed of at a temporary disposal site. Figure 6 depicts the MFA for food waste at KR restaurant.

BB restaurant produces food waste, which is counted from its favourite menu, namely roasted tilapia. The total food waste the BB restaurant generates is 155,008 grams weekly. The restaurant has a sorting system where food waste will be given to third parties for animal feed, and some will be thrown into temporary disposal sites.

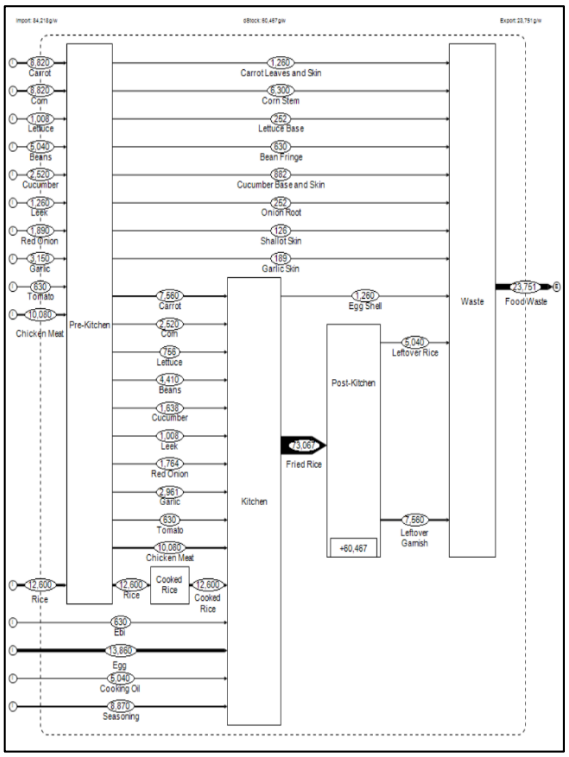

Fig. 5. Flow of Food Waste at the FGS Restaurant

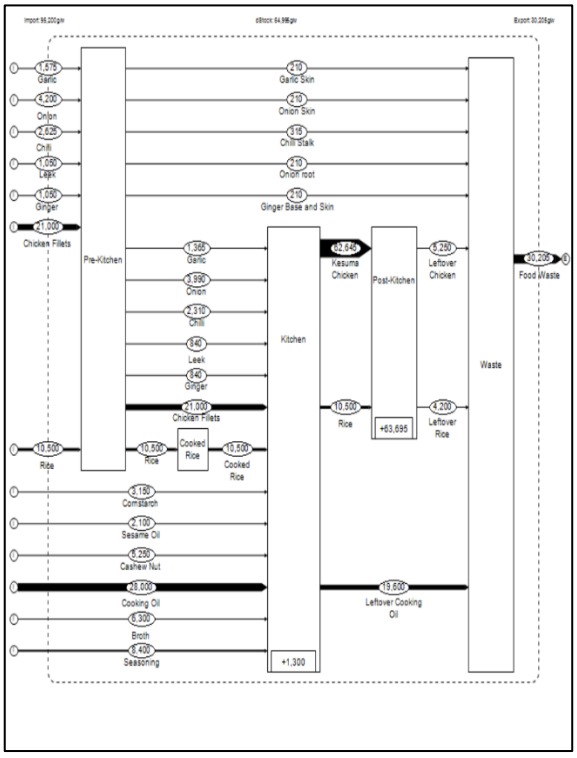

Fig. 6. Flow of Food Waste at KR Restaurant

Sorting is done based on leftover vegetables, animal side dishes, and leftover food that still needs to be finished by customers. The MFA of food waste in BB restaurant is shown in Figure 7.

The BD restaurant produces food waste, including its favourite menu, fried duck. The total food waste generated by the BD restaurant is 96,096 grams weekly. The restaurant has a system where all food waste will be collected in containers and disposed of at a temporary disposal site. Figure 8 presents the results of MFA on food waste at BD restaurants.

 EISSN: 2961-872X ● PISSN: 2961-8924 ● DOI: 10.56741/esl.v2i03.415

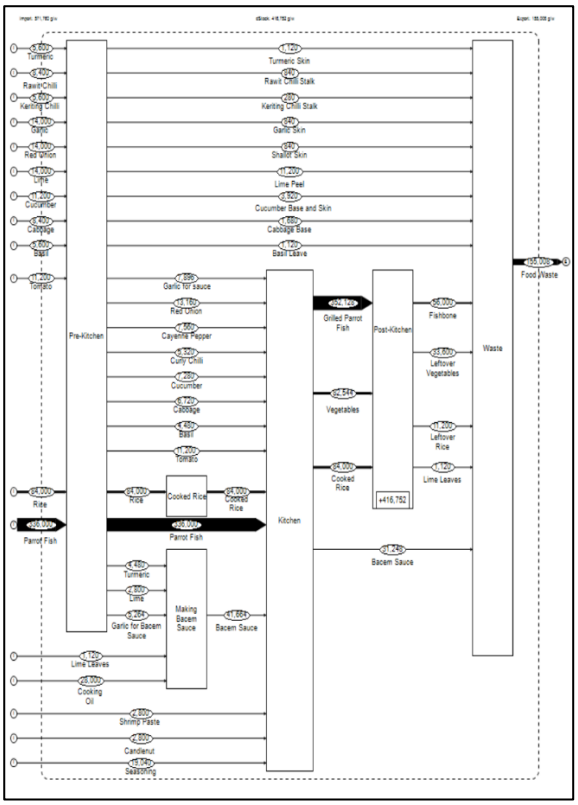

Fig. 7. Food Waste Flow from BB Restaurant

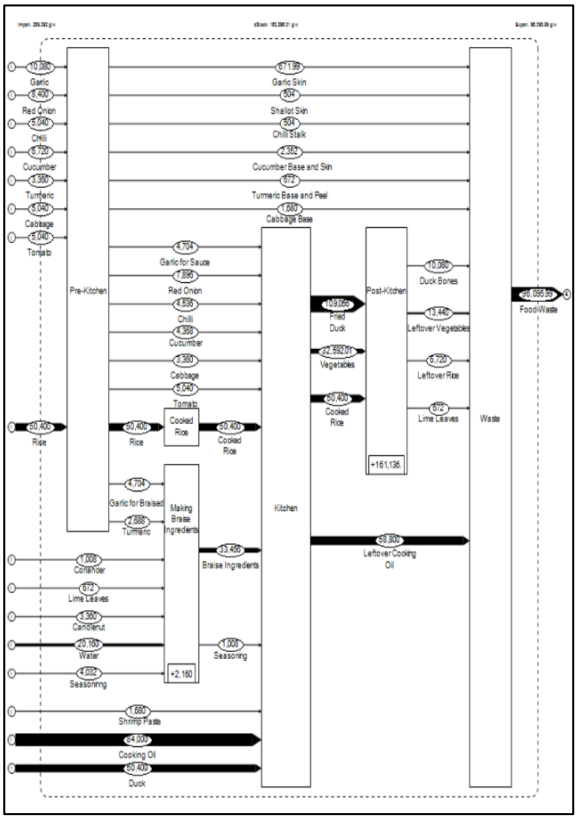

Fig. 8. Food Waste Flow from BD Restaurants

The BTR restaurant produces food waste, including fried tilapia, on the favourite menu. The total food waste produced by the BTR restaurant is 121,974 grams weekly. The restaurant has a system where all food waste will be accommodated in a restaurant container, which will then be disposed of in a temporary disposal site. Food waste management at BTR restaurants in the form of MFA is shown in Figure 9.

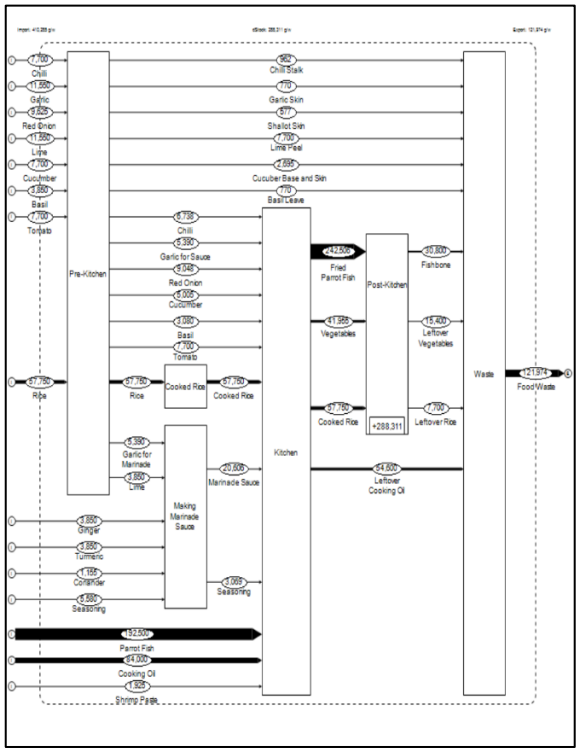

Fig. 9. Food Waste Flow from BTR Restaurants

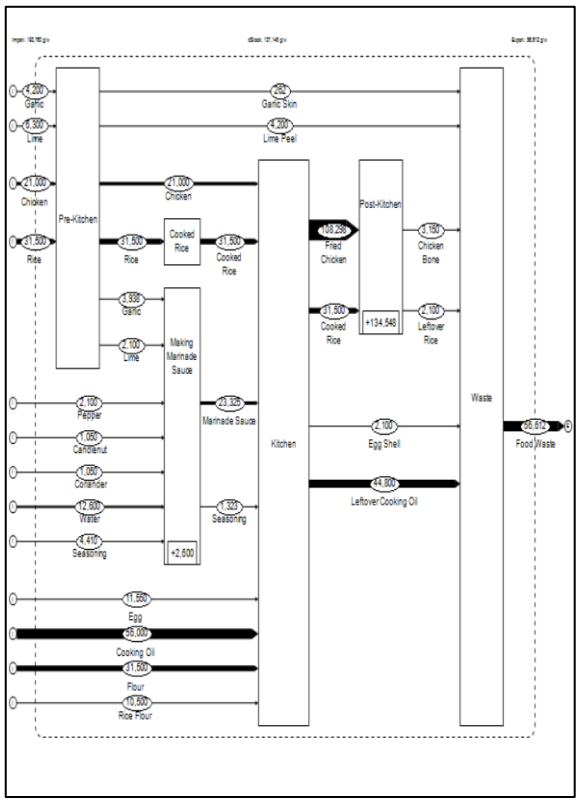

Fig. 10. Food Waste Flow from JJW Restaurants

Next, the MFA for JJW restaurant is presented in Figure 10. The JJW restaurant produces food waste, including its favourite menu, fried chicken. The total food waste produced by the JJW restaurant is 56,612 grams weekly. The restaurant has a system where all food waste will be collected in containers and disposed of at a temporary disposal site.

HRWB produces food waste, including its favourite menu, spicy and sour grilled ribs. The total food waste generated by HRWB restaurants is 72,170 grams every week. The restaurant has a sorting system where food waste will be given to third parties for animal feed, and some will be disposed of in a temporary disposal site. Sorting is done based on leftover vegetables, animal side dishes, and leftover food that still needs to be finished by customers. Food waste management at HRWB restaurants in the form of MFA is shown in Figure 11.

CR restaurant produces food waste, including its favourite menu, free-range chicken lead rice. The total food waste generated by CR restaurants is 62,090 grams every week. The restaurant has a sorting system where some of the food waste will be given to third parties for processing food waste into compost. Sorting is done based on leftover vegetables and animal side dishes and still needs to be over food not finished by customers. Animal side dishes and leftover food will be disposed of in a restaurant disposal container and disposed of in a temporary disposal site. The MFA of food waste of CR restaurant is displayed in Figure 12.

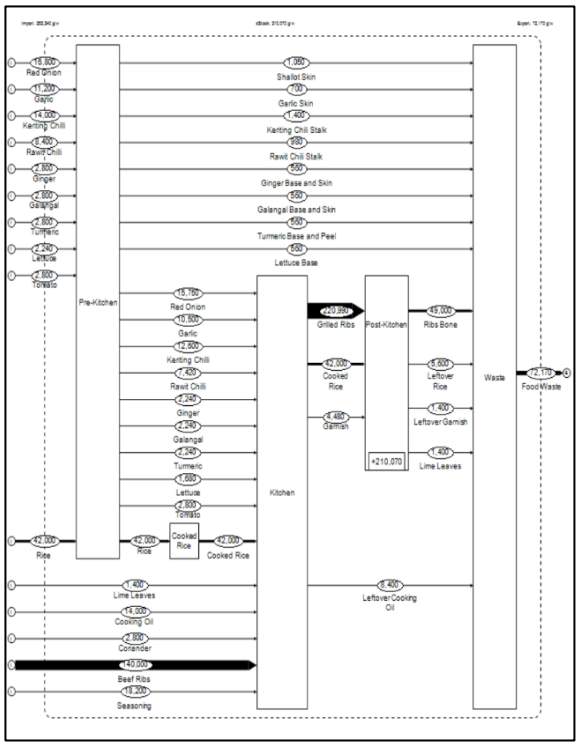

Fig. 11. Flow of Food Waste at HRWB Restaurant

The results showed that the total quantity of food waste in eight restaurants was 617,906 grams/week, with 304,887 grams/week of food waste in the landfill, while the complete food waste from each restaurant is shown in Figure 13. This is because four out of eight restaurants must try sorting and reducing food waste. In addition, there is no cooperation with the management of food waste to manage it to reduce waste that goes directly to the TPA.

B. Costs of Food Waste Management in Restaurants

Food waste management in restaurants is illustrated through a scheme that occurs from storing food waste to food waste managed by a third party or disposed of in a temporary disposal site. Management costs in each restaurant are visualised using a Sankey diagram, which includes labour costs, costs for food waste storage containers and transportation costs for disposal to temporary disposal sites.

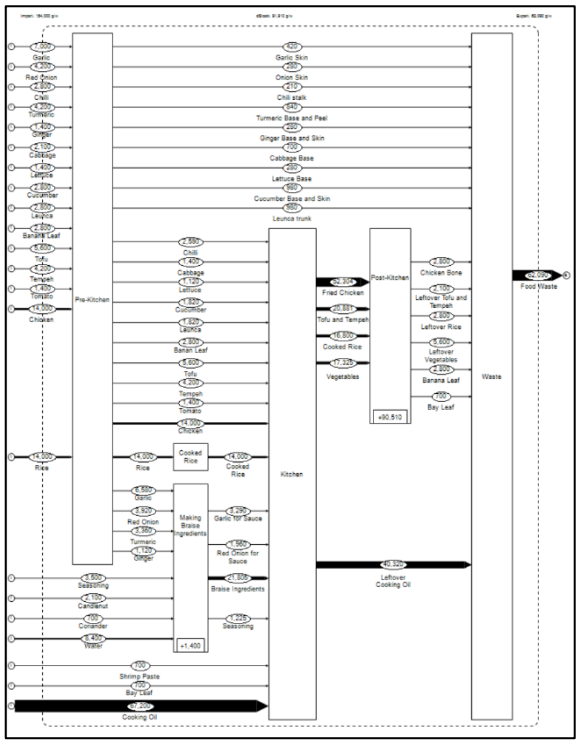

Fig. 12. Flow of Food Waste at CR Restaurant

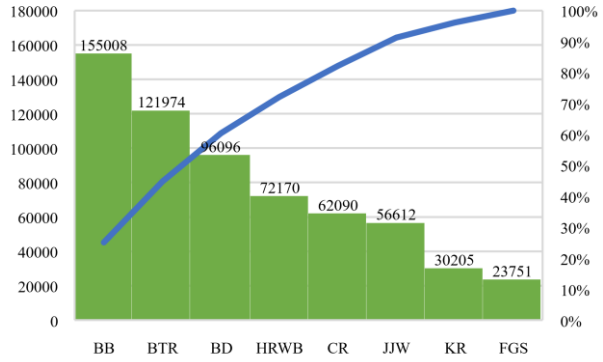

Fig. 13. Total Food Waste Diagram for Each Restaurant

The cost of carrying out food waste in eight restaurants is displayed in Figure 14. The process of managing food waste is carried out by four of the eight restaurants that have been studied.

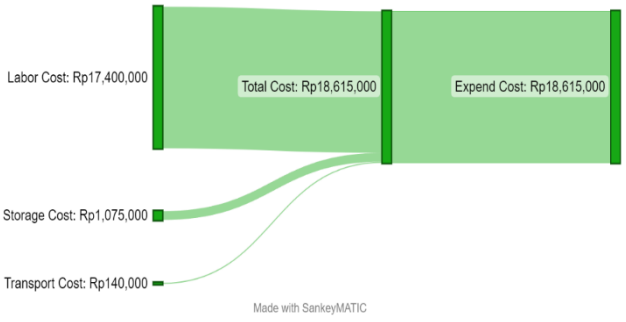

Fig. 14. Sankey Diagram Food Waste Management Cost for 8 Restaurants (IDR/Month)

EISSN: 2961-872X ● PISSN: 2961-8924 ● DOI: 10.56741/esl.v2i03.415

The interviews found that four restaurants could have managed because the trash disposed of from the restaurant was given directly to government officials who picked up the waste to be taken to a temporary disposal site.

VI. Conclusion

Based on the results of the research and analysis that has been carried out, the following conclusions are obtained:

A. Overall Total Food Waste

The total food waste produced by each restaurant is different. The FGS restaurant delivers 23,751 grams of food waste in one week, with a percentage of 28% being food waste and 72% being consumed by customers. KR restaurant provides 30,205 grams of food waste in one week, with 32rate food waste and 68% finished by customers. BB restaurant produces 155,008 grams of food waste in one week, with a percentage of 27% being food waste and 73% being consumed by customers. BD restaurant delivers 96,096 grams of food waste in one week, with a rate of 37% becoming food waste and 63% being consumed by customers. The BTR restaurant produces 121,974 grams of food waste in one week, with a percentage of 30% being food waste and 70% being consumed by customers. The JJW restaurant produces 56,612 grams of food waste in one week, with a percentage of 30% being food waste and 70% being consumed by customers. HRWB restaurant delivers 44,170 grams of food waste in one week, with a rate of 23% becoming food waste and 77% being consumed by customers. CR restaurant produces 62,090 grams of waste in one week, with 41% becoming waste and 59% consumed by customers. The total food waste in eight restaurants is 617,906 grams/week, of which 304,887 grams/week is wasted directly into the TPA.

B. Types of Food Waste

Restaurants produce various types of food waste. Restaurants in the eastern and southern regions of Yogyakarta City make food waste at the pre-kitchen stage in the form of garlic skins, shallot skins, chilli stems, cucumber base and skin, lettuce base, leek roots, corn stalks, bean edges, lime peels, ginger base and skin, turmeric base and skin, galangal base and skin, carrot leaves and skin, onion skin, cabbage base, basil leaves, cabbage base and launch stem with a total food waste of 68,546 gram/week. The most significant food waste was found in lime peels, 34% of the total, followed by skin and base of cucumbers by 16% and corn stalks by 9%. At the kitchen stage, in the form of egg shells, oil, marinade, lime leaves, and bay leaves, with a total kitchen stage food waste of 265,020 grams/week. The most significant food waste is found in oil, 86% of the total, followed by marinade at 12%. At the post-kitchen stage in the form of leftover rice, leftover chicken, leftover garnishes, bones, leftover fresh vegetables, duck bones, chicken bones, ribs, leftover tofu and tempeh and banana leaves with a total post-kitchen stage food waste of 284,340 grams/week. The most significant food waste was found in fish bones, 30% of the total, followed by 24% leftover vegetables and 16% leftover rice.

C. Food Waste Management Costs

Food waste management costs incurred by restaurants in the city of Yogyakarta in the eastern and southern regions are labour costs each month amounting to IDR 17,400,000.00, storage costs, namely plastic waste each month amounting to IDR 1,075,000.00 and transportation costs for picking up waste from the government each month amounting to Rp. 140,000.00 of all the restaurants studied, four out of eight restaurants did not try to process food waste further. The waste generated by the four restaurants is disposed of at the temporary disposal site without processing the food waste.

This research can identify the quantity of each type of food waste and management costs generated by the restaurant. The results of this research can be used as a reference in increasing the efficiency of using cooking raw materials, knowing waste in production, developing an active attitude of concern for the environment, and utilising food waste by turning it into something useful. The results of this research can also be the basis for policymaking in overcoming the food waste problem based on information about where, what, and how much food waste is generated.

References

[1] D. Bisara, "Indonesia Second Largest Food Waster," *jakartaglobe.id*, 2017. https://jakartaglobe.id/business/indonesia-second-largest-food-waster (accessed Mar. 10, 2022).

[2] BAPPENAS, "Food Loss and Waste di Indonesia," *Laporan Kajian Foodd Loss and Waste Di Indonesia*, pp. 1–116, 2021.

[3] M. Saputri, "1/4 Sampah Makanan Global Bisa Beri Makan 870 Juta Jiwa," *tirto.id*, 2017. https://tirto.id/1-4-sampah-makanan-global-bisa-beri-makan-870-juta-jiwa-cuas (accessed May 03, 2022).

[4] B. Lipinski, C. Hanson, J. Lomax, L. Kitinoja, R. Waite, and T. Searchinger, "Toward a sustainable food system Reducing food loss and waste," *World Resource Institute*, no. June, pp. 1–40, 2016.

[5] W. Wulandari and A. M. S. Asih, "Perilaku Rumah Tangga terhadap Food Waste di Indonesia: Studi Literatur," *Seminar Nasional Teknik Industri Universitas Gadjah Mada*, pp. 93–98, 2020.

[6] S. Ardianto, "Berita Jogja: Rumah Makan dan Restoran Jadi Penyumbang Sampah Organik Tertinggi di DIY," *Djawanews.com*, 2020. https://djawanews.com/berita-hari-ini/berita-jogja-rumah-makan-dan-restoran-jadi-penyumbang-sampah-organik-tertinggi-di-diy-1584 (accessed Jul. 20, 2023).

[7] A. Abidin and E. B. Leksono, "Koagulan Dengan Konsep Reverse Logistics," *Jurnal INTECH Teknik Industri Universitas Serang Raya*, vol. 7, no. 1, pp. 39–44, 2021.

[8] I. Masudin, "A Literature Review on Green Supply Chain Management Adoption Drivers," *Jurnal Ilmiah Teknik Industri*, vol. 18, no. 2, pp. 103–115, 2019, doi: 10.23917/jiti.v18i2.7826.

[9] H. Maheswari, A. Sigit Santoso, and D. Putri Kuncoro, "Pengaruh Kegiatan Reverse logistic Terhadap Kinerja Supplier Chain Position Industri Telepon Selular," *Jurnal Ilmiah Manajemen dan Bisnis*, vol. 2, no. 2, pp. 715–737, 2016.

[10] W. Filho and M. Kovaleva, *Food Waste and Sustainable Food Waste Management in the Baltic Sea Region*. 2015. doi: 10.1007/978-3-319-10906-0.

[11] E. D. & F. H. Durachim, "Restoran Bisnis Berbasis Standar Kompetensi," *Jurnal Pariwisata*, vol. IV, no. 1, pp. 10–21, 2017.

[12] P. H. Brunner and H. Rechberger, "Material Flow Analysis B o o k Reviews Practical Handbook of Material Flow Analysis," *Waste Management*, vol. 9, no. 5, pp. 337–338, 2004.

[13] M. Thamagasorn and C. Pharino, "An analysis of food waste from a flight catering business for sustainable food waste management: A case study of halal food production process," *Journal of Cleaner Production*, vol. 228, no. 2019, pp. 845–855, 2019, doi: 10.1016/j.jclepro.2019.04.312.

[14] V. Amicarelli, C. Bux, and G. Lagioia, "How to measure food loss and waste? A material flow analysis application," *British Food Journal*, vol. 123, no. 1, pp. 67–85, 2021, doi: 10.1108/BFJ-03-2020-0241.

[15] W. Khomchu *et al.*, *Material Flow Analysis (MFA) and Life Cycle Assessment Study for Sustainable Management of PVC Wastes in Thailand (Phase III)*, vol. 40. Elsevier Masson SAS, 2017. doi: 10.1016/B978-0-444-63965-3.50091-X.

[16] S. Fiore, D. Ibanescu, C. Teodosiu, and A. Ronco, "Improving waste electric and electronic equipment management at full-scale by using material flow analysis and life cycle assessment," *Science of the Total Environment*, vol. 659, pp. 928–939, 2019, doi: 10.1016/j.scitotenv.2018.12.417.

[17] K. P. Jain, J. F. J. Pruyn, and J. J. Hopman, "Material flow analysis (MFA) as a tool to improve ship recycling," *Ocean Engineering*, vol. 130, no. November, pp. 674–683, 2017, doi: 10.1016/j.oceaneng.2016.11.036.