Development of a Non-Invasive Method for Monitoring of HV Circuit Breaker Switching Time

Manuscript received February 15, 2026; revised June 4, 2026

Sagar Bhutada
R&D Technology Center
Electrical Research & Development Association
Vadodara, India
sagar.bhutada16@gmail.com

***Abstract*—Modern HV circuit breakers may be vulnerable to catastrophic failure as they are designed for higher stress than the earlier CB designs with multiple interrupters per pole. With the advantage of controlled switching, improved performance is obtained for dielectrically well-designed interrupters, which achieve a re-ignition-free window during opening of the CB, in turn minimizing the risk of nozzle puncture. On occasion, asset owners may wish to check whether the CB is performing satisfactorily and whether the controllers are providing reliable and repeatable stress control. Monitoring of voltage waveforms during switching using well-established offline diagnostic methods will provide information about small re-ignitions and re-strikes. However, waveform measurement at moderately high signal frequency would require a CB outage to connect specialized equipment. A non-invasive measurement technique devising re-striking voltage sensors has been developed by the authors to measure high-frequency voltage waveforms occurring during switching operations without the need for an outage. Results of tests performed in the laboratory and 245 kV substation illustrating the capability of this new method to detect re-ignitions are presented in this paper. The proposed diagnostic approach relies on parameters such as operating times, pre-strike characteristics, and restrike detection. Transient electromagnetic emissions have been identified as a promising means to evaluate the above parameters non-intrusively.**

Keywords— Controlled Switching, HV Circuit Breaker (CB), Non-invasive Measurement, Re-ignition/Re-strike, Transient Electromagnetic Emissions

I. Introduction

Over the last decade, electricity grids have gone through rapid modernization with two-way power flow and penetration of renewable energy. In the modern electrical network, not only is the power system changing, but the switchgear design is following the same path. To adapt to the needs of the modern electrical grid, we have witnessed the evolution from a manually operated switch to a modern "smart switch" with embedded sensors, digital protection, and various control functions. New switchgear standards have been developed, resulting in safer and more environmentally friendly substation assets.

With the development of novel materials and design concepts, substation asset sizes have reduced. All of this has resulted in increased switchgear functionality and connectivity. At the same time, requirements for the electrical grid are becoming more rigorous, including the reduction of power outages, higher safety, environmental requirements, and better power quality. Such requirements have a large impact on the switchgear specifications and design.

In the aim to optimize the maintenance costs of switchgear equipment, there is a general trend in the utilities to move from systematic, time-based maintenance to condition and risk-based maintenance by taking advantage of modern diagnostic tools and the advancing transformation of the network to the smart grid. There are many diagnostic techniques available today for the condition assessment of switchgear equipment, but no work has been done specifically on Non-Intrusive Condition Assessment Methods (NICAM). Non-Intrusive Condition assessment methods are defined according to the following scale:

- Non-intrusive: The switchgear is not affected.
- Minimally intrusive: No major tests or repairs required before returning to service.
- Intrusive: Tests are necessary before returning to service.

II. Catastrophic Failure Modes of HV Circuit Breakers

In case of an unsuccessful opening or an incomplete closure of a live tank CB, the arc current could remain across a gap in the interrupter limited to normal load level and could last until the rupture of the enclosure due to an overpressure or a thermal shock to the porcelain insulator. The presence of an internal arc could remain undetected by the grid protective relays because there is no significant current disparity between the normal and fault conditions. Generally, live tank CBs do not have any pressure relief devices. An internal arc in an interrupter of a high-voltage live tank CB with porcelain insulators can cause major consequences: risk of compromising personnel safety, system outage, and damage to surrounding equipment.

For dead tank CBs, the risk of major consequences is reduced as any internal arc fault will rapidly develop to a line-to-ground fault and will be cleared by the grid protection. In case of overpressure, the gases will be released through a pressure relief device. Nevertheless, catastrophic failures are possible because of high arc energy due to fault current, which could be released inside a CB enclosure.

A. Transient electromagnetic emissions due to CB switching

Transient electromagnetic emissions (TEE) due to CB switching in substations were studied in the 1980s and 1990s. This research was essentially motivated by the need to assess electromagnetic interference that could affect the reliability of wireless communication and electronic equipment newly installed in high-voltage substations [1], [2]. Since then, significant advances have been made in the modelling, measurement, and characterization of switching-induced

 EISSN: 2961-872X ●PISSN: 2961-8924●DOI: 10.56741/IISTR.esl.002082

electromagnetic disturbances. Computational and time-domain analyses have been employed to quantify transient field propagation and frequency characteristics in high-voltage substations [3]–[5]. The growing use of intelligent electronic devices and digital substations has further stimulated research on the effects of switching transients on sensitive equipment and communication systems [6]. Recent studies have also investigated electromagnetic emissions associated with GIS switching operations, including radiated fields and VFTO phenomena in extra-high-voltage substations [7], [8]. Furthermore, improved circuit-breaker models have enabled more accurate representation of electromagnetic transients generated during switching events, supporting the development of effective electromagnetic compatibility and mitigation strategies [9].

More recently, this field of research has been reactivated because TEEs have been shown to be useful for the assessment of CB operations. Arcing during circuit breaker switching generates RF emissions that can be exploited for diagnostic purposes. Furlong et al. [10] suggested that contact separation instants could be identified through time–frequency analysis of RF emissions generated during CB opening operations. Chapman [11] proposed a radiometric technique for measuring arc duration using an electric field sensor installed near the CB. Furthermore, Looe et al. [12] reported significantly high-frequency effects in SF6 circuit breakers, demonstrating that switching arcs produce characteristic electromagnetic signatures. These findings support the use of RF-based measurements as a non-intrusive approach for monitoring and assessing circuit breaker operation.

Moore [13] proposes assessing the closing times for each pole of a live tank CB by means of four antennas spaced around the periphery of the CB. The closing sequences between the three poles were performed by means of the location of the emission source using a Time Difference of Arrival (TDOA) technique. Portugues et al. [14] propose a method based on TEE for partial discharges monitoring of substations. Results of two study cases are presented for 245 kV and 66 kV substations. The above-mentioned studies highlighted a major benefit of TEE-based diagnostics, namely its ability for non-intrusive operation. Thus, it offers the possibility of retrieving relevant diagnostic information about a CB while it remains in service.

B. UHF transient electromagnetic emissions: Description of physical phenomena

Several transient phenomena occur in the CB interrupter: disruptive discharge (prestrike, restrike, and re-ignition), sustained arc instabilities (arcs during load current interruptions and arcs during faults), and partial or corona discharges (generated in response to overvoltage) [15]-[19]. In this paper, only disruptive discharges are analyzed.

The disruptive discharge is characterized by the fact that initially, no current flows through the circuit, and voltage is present across the contacts. On closing, the capacitance and the electric field increase between the two approaching contacts. When dielectric breakdown occurs, the accumulated charges give rise to a high-frequency transient current and a wideband TEE, indicating the exact instant of prestrike. A similar phenomenon may occur after opening if the transient recovery voltage (TRV) exceeds the dielectric withstand capability of the contact gap. In this case, the corresponding TEE indicates the instant of restrike or re-ignition. Such switching-induced transient phenomena have been investigated through both experimental measurements and electromagnetic simulations in high-voltage substations [3]–[5], [7], [8].

Looe et al. [12] showed that the response of the interrupter circuit to a perturbing voltage ramp with a rise time of 1 ns takes the form of a voltage oscillation at a frequency of approximately 400 MHz with a decay time of about 10 ns. Moreover, the oscillation frequency and decay characteristics were found to be similar for both fully opened and partially opened interrupter contacts. These observations are consistent with later studies that analyzed the frequency-domain characteristics of switching transients and electromagnetic disturbances in high-voltage substations [5], [6], [9]. Hundreds of measurements on different live-tank CBs operating on transmission networks have confirmed the presence of TEEs with dominant frequency components around 400 MHz during prestrikes, re-ignitions, and restrikes. For live-tank CBs, the TEEs generated by these high-frequency oscillations are only slightly affected by the interrupter housing because its walls are typically made of dielectric materials, such as porcelain or polymers, which allow electromagnetic waves to propagate with limited attenuation.

Since antennas are usually installed several meters away from the CB, they operate in the far-field region of the emitted radiation. Consequently, conventional electromagnetic wave propagation principles can be applied for signal interpretation and source localization. This characteristic has motivated the development of radiometric and RF-based diagnostic techniques for monitoring switching events, partial discharges, and insulation condition in high-voltage equipment [14], [15], [17]–[19].

III. Measurement Technique and Site Arrangements

The recording setup consists of a disk cone antenna, as shown in Fig. 1, which was indigenously developed with a sampling scope and a personal computer. The disk cone antenna was fabricated from a dual cone element rising from an earth plane, having its main attributes such as broadband operation and omnidirectionality. The design provides a flat frequency response of the vertical electric field in the range 0.1-1 GHz with a constant impedance of 50 Ω.

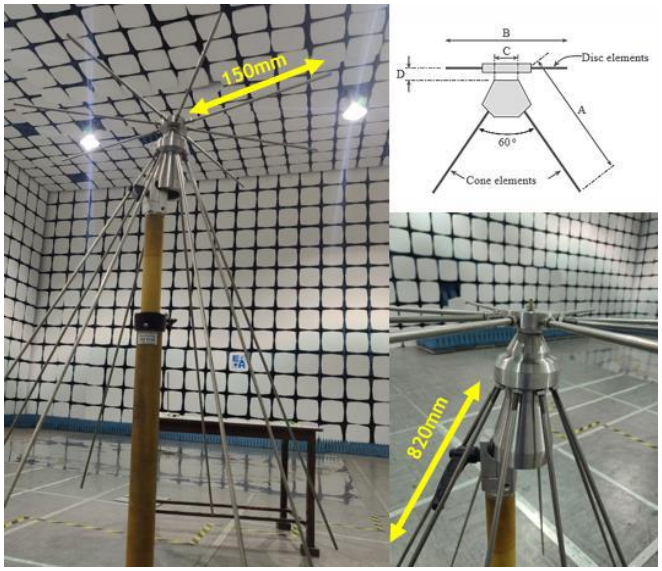

Fig. 1. Developed recording hardware

Impulses from the operating circuit breaker can be recorded using direct digital sampling of the antenna signals. Digitization of the antenna signals was made with a 4-channel Yokogawa DL9240 having an analog bandwidth of 1.5 GHz. The Scope was kept at a sampling rate of 2.5 gigasamples per second (Gsamples/s). Conventional amplitude triggering of

 EISSN: 2961-872X ●PISSN: 2961-8924●DOI: 10.56741/IISTR.esl.002082

the scope was used. Fig. 2 shows the field trial on a 72.5 kV CB that is attached to a short circuit testing laboratory, as shown below. Following the operation of the circuit breaker, memory data, accompanied by timestamps, was downloaded to a PC via a USB connection.

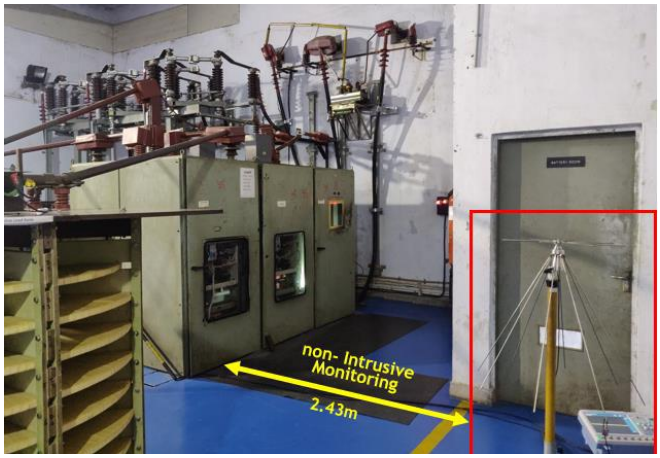

Fig. 2. Photograph showing site arrangements

From the timing analysis of the impulses received, the switching time of the CB can be measured as shown in Fig. 3. The relationship between the breaker opening and closing impulses is also discussed in the paper. Typical results recorded by the hardware-opening impulses, where the voltages present on the antennas are relatively large, having initial peak-to-peak values between 4 and 6V, since the antenna was afforded a direct line of sight from the CB unit. In addition to the opening impulses, closing impulses were also monitored during the continuous running of 1 month of site visits. The average opening time of the breaker came out to between 34 and 37 msecs, and the average closing time was in the range of 66-69 msecs. Using the time stamp facility in the oscilloscope, the arrival of all the recorded impulses was logged, and the digital records were confirmed with the substation data log.

This method is very suitable for the detection and monitoring of restrikes and re-ignitions, where the frequency of occurrence with exact timing within the operation sequence can be provided. Fig. 4 illustrates a case of restrike on the same 72.5 kV CB shown in the setup. This method can be applied to any energized CB in the field without the requirement for outages or retrofitting. Fig. 5 shows the general test arrangements for such a field test. Measurement of the circuit breaker switching times by this online condition monitoring method is completely remote and non-intrusive, which can be seen in Fig. 6, where disk cone antennas are installed near a 245 kV 1-ph/pole CB.

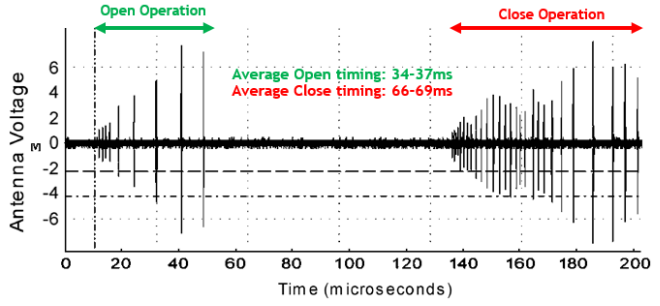

Fig. 3. Waveform captured during circuit breaker open and close switching operation

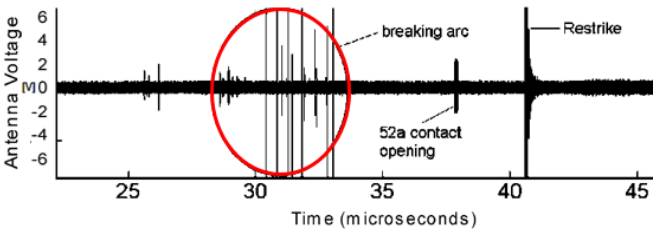

Fig. 4. Breaking arc and restrike-related Transient Electro-Magnetic Emission observed on 72.5 kV CB

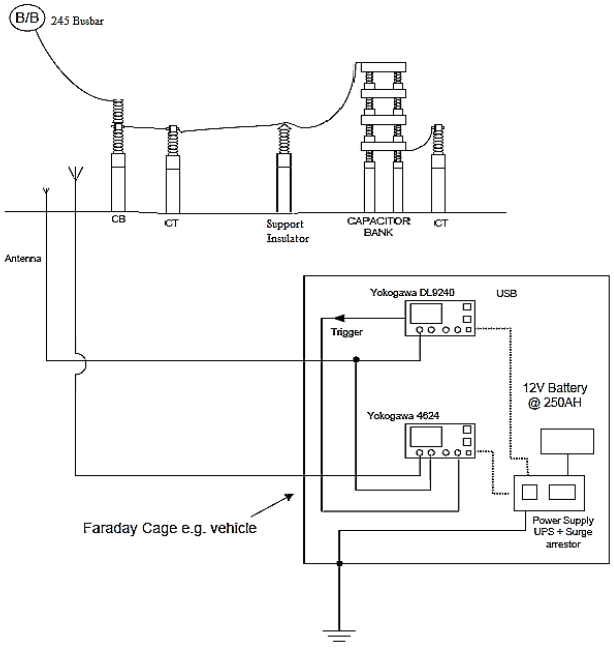

Fig. 5. General Test Arrangements for field test Arrangements



Fig. 6. Site Arrangements on 245 kV SF6 1 ph/pole CB

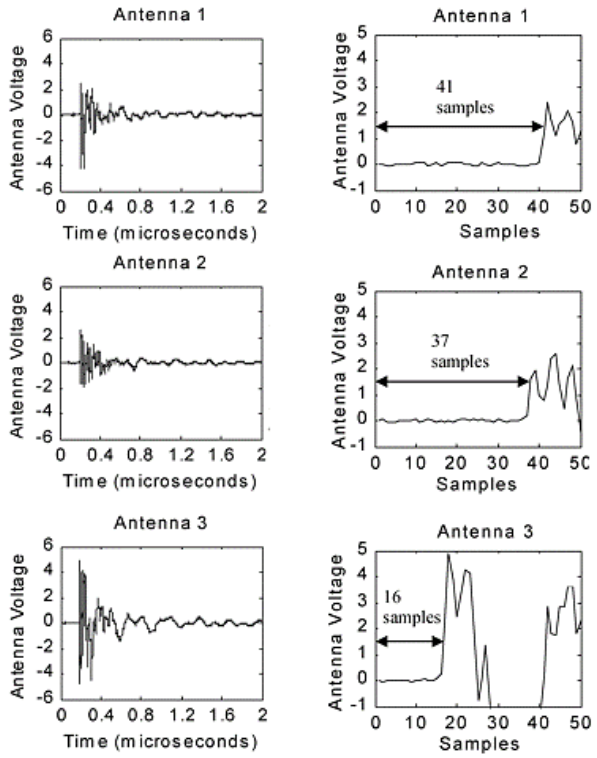

Fig. 7. Waveforms captured during close operation

IV. Results and Case Studies

Typical results recorded by the hardware—closing impulses—are shown in Fig. 7, where the voltages present on the antennas are relatively large, having initial peak-to-peak values between 4 V and 9 V.

At each pole closing operation, a single impulse is recorded by the system. Therefore, operation of the breaker results in three impulses of the type shown in Fig. 7. Using the time-stamping facility of the digitizing oscilloscope, the arrival times of all recorded impulses were logged as shown in Table 1. The equipment was left running continuously from May 15 to 22, 2021, although changes to the trigger level were made during periodic site visits. All digital records of the CB operation were confirmed with the substation log.

TABLE I. Timestamps and Closing timings for 245 kV CB through non-intrusive monitoring

Event	Pole Closing Time (ms)		
	Left	*Middle*	*Right*
1.	81.06	81.06	81.06
2.	81.09	81.66	81.37
3.	82.15	82.86	82.37
4.	81.15	81.80	81.34
5.	81.18	82.83	81.36
6.	82.16	81.82	81.35
7.	81.13	81.77	82.35
8.	81.06	81.68	82.45
9.	81.10	82.87	81.35
Mean	82.12	81.80	82.38
Standard Deviation	0.04	0.08	0.04
Results of the timing test	82.20	81.88	82.00

The technique described in the previous section was used on different live-tank SF6 CBs at rated voltages from 145 to 245 kV used for switching shunt reactors, shunt capacitor banks, and harmonic filter banks. The measurements were taken during normal CB operations on the network. Three of these cases are shown in this section and summarized in Table 2.

TABLE II. Summary of case studies

Study	Years in Service	Number of operations	Application
1	7	1114	Capacitor banks
2	30	8646	Harmonic Filter
3	22	3840	Capacitor banks

TABLE III. Determination of prestrikes during closing operations for three case studies

Case/ Event	Pole Closing Time (ms)								
	Left			*Middle*			*Right*		
	T (ms)	*d (uS)*	*MP*	*T (ms)*	*d (uS)*	*MP*	*T (ms)*	*d (uS)*	*MP*
1.1	55.47	89.86	N	61.25	0.18	N	58.73	<0.10	N
1.2	55.20	3.03	N	61.07	0.10	N	58.58	0.13	N
1.3	55.50	4.05	N	61.34	0.13	N	58.69	0.20	N
1.4	55.35	26.13	N	61.14	1.07	N	58.67	0.18	N
1.5	55.48	68.74	N	61.20	2.04	N	58.85	<0.10	N
2.1	73.64	1.05	N	72.48	2.39	N	73.87	0.27	N
2.2	74.88	5.77	N	73.69	1.53	N	74.63	<0.10	N
2.3	74.89	39.50	N	74.20	47.89	N	73.99	<0.10	N
2.4	73.62	72.40	N	72.55	42.83	N	73.87	15.69	Y
2.5	76.24	42.54	N	73.88	46.70	N	74.10	0.40	N
3.1	59.41	320	Y	56.81	638	Y	57.22	230	Y
3.2	59.67	251	N	56.82	130	Y	56.82	129	Y
3.3	59.16	451	Y	57	1188	N	58.19	1	N
3.4	59.19	385	Y	56.87	559	Y	57.14	258	N
3.5	59.68	185	Y	57.06	1216	Y	57.96	317	N

Note: MP= Multiple Pre-strikes (Yes or No) and delays *d* represent the intervals between the first and last interrupter breakdowns within the CB poles.

In Table 3, the delays *d* represent the intervals between the first and last interrupter breakdowns within the CB poles. The table also indicates the absolute time of the first breakdown in the poles (t) and shows an example where multiple prestrikes are observed in the interrupters. Following the first prestrike, the prestriking arc currents are limited by the capacitors across interrupters, which become very weak, causing their interruption prior to the prestriking of the interrupters.

The capability of electromagnetic emissions to propagate through substation environments has encouraged the development of radiometric monitoring techniques for high-voltage equipment. In particular, RF and UHF sensing technologies have been extensively investigated for the

 EISSN: 2961-872X ●PISSN: 2961-8924●DOI: 10.56741/IISTR.esl.002082

detection of partial discharges and insulation defects in substations and other high-voltage apparatus [20]–[22]. Advances in sensor design have further improved the sensitivity and localization capability of electromagnetic-based diagnostic systems [23]. More recently, signal-processing and machine-learning techniques have been introduced to enhance the identification and classification of discharge events under practical operating conditions [24]. Studies have also demonstrated that discharge activity under transient and impulse voltage stresses produces characteristic electromagnetic signatures that can be detected remotely [25]. Building on these developments, RF-based early warning systems have been successfully deployed in air-insulated substations for continuous condition monitoring and fault prevention [26].

V. Conclusion

A novel technique for the measurement of CB switching time has been developed. The significant advantages of the method are that measurements can be taken while the CB is energized, that no physical connection is made, and that the equipment is portable and can be easily moved between different switch gears. Field trials on a 245-kV, CB attached to a capacitor bank have shown that the closing time can be reliably and consistently measured. The equipment must be positioned within 10 m or so of the target CB. The results show a close approximation to timing test measurements. A further advantage of the technique lies in its ability to continuously monitor the CB over a period: this allows not only a single timing measurement to be made, but also to investigate the variability of consecutive measurements. With the inclusion of a current clamp on the CB wiring, the overall operating time can be measured.

References

[1] N Ari, W Blumer, “Transient electromagnetic fields due to switching operations in electric power systems”, IEEE Transactions on Electro-magnetic Compatibility, Issue 29, Page no. 7-233, 1987.

[2] CM Wiggins, SE Wright, “Switching transient fields in substations”, IEEE Transactions on Power Delivery, Issue 6 (2), page no. 591-600 1991.

[3] B. U. Musa, W. H. Siew, and M. D. Judd, “Computation of Transient Electromagnetic Fields Due to Switching in High-Voltage Substations,” *IEEE Transactions on Power Delivery*, vol. 25, no. 2, pp. 1154–1161, 2010.

[4] B. U. Musa, W. H. Siew, and M. D. Judd, “Time Domain Analysis of Switching Transient Fields in High Voltage Substations,” *UHVNet Colloquium*, Glasgow, UK, pp. 65–68, 2009.

[5] B. U. Musa, W. H. Siew, M. Judd, T. Wang, and Q. Li, “Time and Frequency Characterisation of Transients Because of Switching in 400 kV Air-Insulated Substations: Bus Bar Currents,” *IET Generation, Transmission & Distribution*, vol. 6, no. 5, pp. 417–423, 2012.

[6] H. T. Wu, C. Q. Jiao, X. Cui, X. F. Liu, et al., “Transient Electromagnetic Disturbance Induced on the Ports of Intelligent Component of Electronic Instrument Transformer Due to Switching Operations in 500 kV GIS Substations,” *IEEE Access*, vol. 5, pp. 9717–9726, 2017.

[7] J. Zhao, W. Chen, J. Zhang, Y. Xia, W. He, and K. Li, “Simulation of Electromagnetic Fields Emitted from GIS Bushing Due to Disconnectors Switching Operation in 1000 kV Substations,” *CSEE Journal of Power and Energy Systems*, vol. 11, no. 5, pp. 1963–1971, 2025.

[8] X. Wang et al., “Analysis of VFTO Triggered by Disconnector Switching in 750 kV Air-Insulated Substation,” *Electric Power Systems Research*, vol. 245, 2025.

[9] M. Stojkovic et al., “Modelling of Electromagnetic Transients in Multi-Unit High-Voltage Circuit-Breakers,” *Electric Power Systems Research*, vol. 235, Art. 110766, 2024.

[10] SA Furlong, GR Jones, J Humphries, JR Gibson, RG Lewis, “Radio frequency emissions from arcing in high voltage circuit-breakers”, Proceedings XIII in International Conference of Gas Discharges and their Application 2000.

[11] M Chapman, “Radio-frequency-based determination of arcing duration in HVAC circuit breakers”, 18th International Conference of Electricity Distribution (CIRED), Turin, 2005.

[12] HM Looe, KJ Brazier, Y Huang, PF Coventry, GR Jones, “High-frequency effects in SF6 circuit breakers”, IEEE Transactions on Power Delivery, Issue 19 (3), Page 1095-104, 2004.

[13] P Moore, “Radiometric measurement of circuit-breaker inter-pole switching times”, IEEE Transactions on Power Delivery, Issue 19 (3), Page no. 987-992, 2004.

[14] IE Portugues, PJ Moore, IA Glover, C Johnstone, RH McKosky, MB Goff, et al., “RF-based partial discharge early warning system for air-insulated substations”, IEEE Transactions on Power Delivery, Issue 24 (1), Page no. 9-20, 2009.

[15] A. Reid, M. D. Judd, R. A. Fouracre, B. Stewart, et al., “Simultaneous Measurement of Partial Discharges Using IEC60270 and Radio-Frequency Techniques,” *IEEE Transactions on Dielectrics and Electrical Insulation*, vol. 18, no. 2, pp. 444–455, 2011.

[16] S. Tenbohlen, D. Denissov, S. M. Hoek, and Z. Ring, “Partial Discharge Measurement in the Ultra High Frequency (UHF) Range,” *IEEE Transactions on Dielectrics and Electrical Insulation*, vol. 15, no. 6, pp. 1544–1552, 2008.

[17] M. D. Judd and O. Farish, “Radiometric Partial Discharge Detection as a Diagnostic Tool for High Voltage Plant,” *IEE Proceedings – Science, Measurement and Technology*, vol. 145, no. 1, pp. 17–24, 1998.

[18] M. D. Judd, O. Farish, and B. F. Hampton, “The Excitation of UHF Signals by Partial Discharges in GIS,” *IEEE Transactions on Dielectrics and Electrical Insulation*, vol. 3, no. 2, pp. 213–228, 1996.

[19] M. D. Judd and O. Farish, “A Pulsed UHF System for On-Line Condition Monitoring of GIS,” *IEEE Transactions on Power Delivery*, vol. 16, no. 4, pp. 548–553, 2001.

[20] H. Chai, B. T. Phung, and S. Mitchell, “Application of UHF Sensors in Power System Equipment for Partial Discharge Detection: A Review,” *Sensors*, vol. 19, no. 5, Art. 1029, 2019.

[21] M. M. Yaacob, M. A. Alsaedi, J. R. Rashed, A. M. Dakhil, and S. F. Atyah, “Review on Partial Discharge Detection Techniques Related to High Voltage Power Equipment Using Different Sensors,” *Photonic Sensors*, vol. 4, no. 4, pp. 325–337, 2014.

[22] H. Chai and B. T. Phung, “UHF Sensor Technology for Partial Discharge Monitoring in High Voltage Equipment,” *Sensors*, vol. 19, no. 5, 2019.

[23] M. Rostaghi-Chalaki, K. Yousefpour, J. P. Donohoe, M. Kurum, et al., “Design of Transmission Line and Electromagnetic Field Sensors for DC Partial Discharge Analysis,” 2020.

[24] M. Dong and J. Sun, “Partial Discharge Detection on Aerial Covered Conductors Using Time-Series Decomposition and Long Short-Term Memory Network,” 2019.

[25] “Partial Discharge Behavior and Insulation Failures Detection in Electrical Devices Subjected to Impulse Voltage Excitation,” *International Journal of Electrical Power & Energy Systems*, 2025.

[26] I. E. Portugues, P. J. Moore, I. A. Glover, C. Johnstone, G. M. McKosky, M. B. Goff, and L. van de Zel, “RF-Based Partial Discharge Early Warning System for Air-Insulated Substations,” *IEEE Transactions on Power Delivery*, vol. 24, no. 1, pp. 20–29, 2009.