An Interim Study of Integrating Spindle, Laser, and Plotter in a CNC Router Machine

Manuscript received September 20, 2022; revised December 3, 2022.

Rosidah Jaafar*
Faculty of Engineering Mechanical & Manufacturing
Universiti Teknikal Malaysia Melaka
Melaka, Malaysia
rosidah@utem.edu.my

Norfariza Ab Wahab
Faculty of Engineering Mechanical & Manufacturing
Universiti Teknikal Malaysia Melaka
Melaka, Malaysia
norfariza@utem.edu.my

Basri Bin Bidin
Faculty of Engineering Mechanical & Manufacturing
Universiti Teknikal Malaysia Melaka
Melaka, Malaysia
basri.bidin@utem.edu.my

Mohammad Nor Mustaqim Bin Johari
Faculty of Engineering Mechanical & Manufacturing
Universiti Teknikal Malaysia Melaka
Melaka, Malaysia
mustaqimans@gmail.com

Kaliswaran A/L Mogal
Faculty of Engineering Mechanical & Manufacturing
Universiti Teknikal Malaysia Melaka
Melaka, Malaysia
kalisw93@gmail.com

Megat Iskandar Fedileh
Faculty of Engineering Mechanical & Manufacturing
Universiti Teknikal Malaysia Melaka
Melaka, Malaysia
iskandarfedileh99@gmail.com

***Abstract*—Although there are so many CNC routers that have been created all around the world, when this manuscript was written, an integrated CNC router with multi different functions was still not common. In this work, we proposed, designed, fabricated, and evaluated a low-cost CNC Router machine that can perform numerous tasks (i.e., spindle engraving, laser, and plotter). Although we first employed a market-available CNC machine, we have developed, changed, and improved almost everything of it so that it can run and go through multiple processes in a single coding process with higher accuracy and efficiency. As a result, the proposed machine is adjusted to conduct an integrated operation without making any significant changes. Through the calibration process, we have validated that the proposed system is capable of performing high-accuracy processes. The proposed CNC router has a wide range of applications and can conduct a variety of engraving procedures, including plotting. Furthermore, when the machine is running, the project runs thru the checks on the accuracy analysis through several processes to ensure the accurate accuracy of the three available processes (spindle, laser, and plotter).**

***Index Terms*—spindle, laser, plotter, router machine, computer numerical control (CNC)**

I. Introduction

A CNC router is a computer-controlled cutting machine that commonly uses a hand-held router as a spindle to cut materials like wood, composites, aluminum, steel, plastics, glass, and foams. A basic CNC router typically only has a single process mechanism, such as a spindle cutter only or a laser cutter only. However, in this project, the router is split into 3 functions (spindle cutting, laser cutting, and plotter) that can run continuously in a single process continues.

The CNC controller comprises of a circuit board with an embedded system microprocessor chip to process the input data and control the output process. The controller algorithm processes the G-code, and M-code interprets it to the output. It controls the movement of the CNC router machine automatically based on the design created by design software (e.g., Solidwork software) and transfers to the GBRL Controller.

The goal of this project is to improve the CNC router machine based on machining performance and make a machine control system that integrates a spindle cutter, laser cutting, and plotter pen to work in one mechanism. This system will minimize the difficulty of machine operation and improve the quality and production capacity.

A. Background

CNC or well known as a computer numerical control router, is a device that is completely controlled by computer software. It is common for a CNC router to have a single element, such as a laser function or spindle function. Different from that, in this project, we propose a developed CNC router that has 3 specific functions in a single CNC router machine (i.e., spindle, laser, and plotter).

CNC routers are generally used for engraving small and soft materials, such as wood, acrylic, plastic, aluminum, foam, and more. Small-scale CNC router machines are exchangeable. However, the user needs to use one cutting element in one process and is required to change the element for the other purpose. In this work, we propose a CNC router that can undergo 3 processes continuously without requiring element changes. In a conventional CNC router, the element needs to be fixed in and fixed out manually. Each time the process change, the head needs to set a new datum point and level setting. In this work, we innovate the machine to work with a spindle laser and a marker pen autonomously in a much more accurate and effective manner.

This project investigates how to improvise the CNC router machine based on machining performance to conduct multiple processes (e.g., calligraphy-making process). In addition, we explore the possibility of combining three elements (i.e., spindle engraving, laser, and plotter) in the CNC machine to perform the designated functions (e.g., creating the art of calligraphy). This work focuses on providing a system that can control these three elements effectively. Because even the development of small-scale CNC machines with

 EISSN: 2961-872X • PISSN: 2961-8924 • DOI: 10.56741/esl.v1i02.159

the integration of spindle, laser, and marker change control systems will increase production efficiency, it still has some minor problems with its accuracy, process continuity, and software process. We aim to maximize the performance of the CNC router with combined elements (i.e., spindle engraving, laser, and plotter).

B. Research Objective

The primary goal of this study is to improve the CNC router machine based on machining performance for calligraphy. Specifically, we set the objectives as follows:

- To design a control system that integrated laser, engraving, and plotter processes.
- To fabricate a low-cost CNC router machine that integrated laser, engraving, and plotter processes feeder.
- To evaluate the accuracy of the design control system based on machining.

The general framework of this study is presented in Fig. 1. Since this is an interim study, we include only the calibration results for the evaluation process. A further detailed evaluation process and deeper analysis will be published in future works.

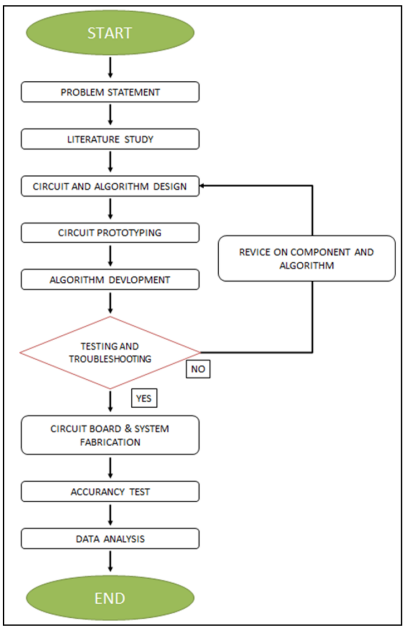

Fig. 1. General Framework of the Study.

II. CNC Machine

A. CNC Router Machine

A CNC router, such as the one illustrated in Fig. 2, is a computer-controlled cutting machine that uses a handheld router as a spindle to cut a variety of materials such as wood, composites, aluminum, steel, plastics, glass, and foams. Several carpentry shop machines, such as the panel saw, spindle molder, and boring machine can be replaced by CNC routers. In terms of concept, a CNC router is similar to a CNC milling machine. To control tool paths, computer numerical control is employed instead of human routing. The CNC router is one of the common machine tools that have been used for the CNC versions.



Fig. 2. A Conventional CNC Machine.

B. CNC Programming

On a CNC machine, there are several ways of position programming. One of them is programming based on reference points. Based on the reference point, there are two ways to program CNC machines, namely [1]:

- Incremental
  Programming incrementally locates the desired point based on the previous point. For example, X+ will make the mower move to the right from its previous position, Y- will make the mower move away from its previous position, and vice versa for the other axes.
- Absolute
  Absolute programming uses the origin point (0,0) as a reference point, so that all movements will be compared with the position of the reference point. For example, X+ will make the cutter blade move to the right from the origin, Y- will make the cutter knife move away from the origin, and vice versa for the other axes.

Based on the way it moves, CNC programming can be divided into two, namely [1]:

- Point to Point
  Positioning from point to point is used when accuracy is required from the spindle position to the preparation. It is commonly used when drilling, expanding holes, branching, or punching holes. Point-to-point position setting is a process when the spindle is placed in a certain position, does work, then moves to the next position, does work again, and so on until all the desired points are completed.
- Continuous Path/Interpolation
  Interpolation can also be called contouring. The interpolation process is the process when the cutting knife is in constant contact with the preparation as it moves from one point to another. The interpolation process itself is divided into two types, namely linear and circular. Linear interpolation is when the cutting machine moves in a straight line on the preparation, while circular interpolation is when the cutting machine moves in a circle over the preparation.

C. Upgraded CNC Router Machine

A typical CNC router can be classified into many categories. It is classified either based on configuration, axes of motion, or characteristics. Based on the router machine design, the proposed upgraded CNC router can perform multiple processes such as graving, laser, and plotter. It is

different from Auto Tool Changer Machine (ATC) CNC [2]. From a standard ATC CNC Router (Syntec 60W-E), we have upgraded the entire system, making the system available for professional use in high-end engraving machines, with higher anti-interference ability using a servo motor. The accuracy of this router is higher, and the operation is more stable. In addition, this CNC requires only 1 program to handle all the processes. In terms of functionality, the upgraded CNC can now undergo 3 processes continuously, from the laser engraving process to plotter and spindle cutting.

1) Spindle: CNC routers are commonly used to perform carving, cutting, drilling, boring, and milling operations based on their design. The productive process of door carvings, interior and exterior design, decorations, wood panel creation, sign board fabrication, wooden frame design, moldings, musical instrument design, and even furniture manufacturing can all be made with a CNC router, especially using the spindle function. In addition, they are used in the industry to automate the trimming process. CNC routers can assist ensure part repeatability and efficient output for manufacturing, or they can be used to create one-off designs.

A spindle is an important tool in the engraving process. Based on [3], [4], for the engraving process for any 3D design, there are three or more progressive steps are frequently used in 3D machining. Depending on the material and software available, each of these is implemented using a variety of basic and complicated processes. Roughly, these processes start with raw stock, also known as billet. Then, the user cuts it harshly to create the final model, which is commonly done with an endmill. Zigzag clearing, offset clearing, plunge roughing, and rest roughing are all common procedures in the engraving process. These procedures are then followed by semi-finishing, where in this procedure, the user approximates the model and cuts to within a preset offset distance from the model after the roughed part. These steps are then completed with the finishing process, where the user makes sure that the final products are decent and free from defects.



Fig. 3. An Illustration of Spindle within an Industrial Lathe. [9]

2) Laser: A laser is a device that produces light through an optical amplification process based on the stimulated emission of electromagnetic energy. The term ”laser” stands for ”Light Amplification by Stimulated Emission Of Radiation”. A laser differs from other light sources in that it emits coherent light. Laser cutting and etching are made possible by spatial coherence, which allows a laser to be focused on a small area. Spatial coherence also enables laser pointers and lidar by allowing a laser beam to remain narrow across long distances (collimation). Higher frequency coherence allows lasers to emit light with an extremely narrow spectrum. Alternatively, temporal coherence can be employed to create ultrashort light pulses with a broad spectrum but femtosecond durations.

In [5], the author explains that laser cutting works by directing the output of a high-power laser through optics, which is the most frequent method among other cutting methods. The laser beam created is directed using a laser. A motion control system is used via a commercial laser for cutting materials to follow a CNC or G-code of the pattern to be cut onto the material. The material is targeted by a focused laser beam, which melts, burns, vaporizes, or is blown away by a jet of gas, leaving an edge with a high-quality surface finish.



Fig. 4. An Illustration of Laser Cutting Machine. [6]

3) Plotter: A plotter is a computer hardware device that prints vector graphics in the same way as a printer does. Rather than a series of dots like a standard printer, plotters employ a pen, pencil, marker, or other writing tools to create several continuous lines on paper. As shown in Fig. 5 is an example of a CNC plotter. Wide-format printers have mostly replaced these devices, which were once commonly employed for computer-aided design. Plotters print schematics and other comparable applications on paper. Plotter printers were once widely utilized in applications like computer-aided design because they could produce line drawings faster and with higher quality than today’s ordinary printers.

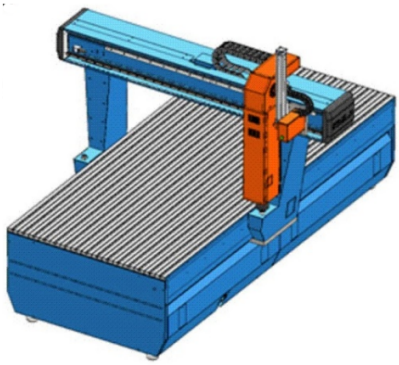

Fig. 5. An Illustration of Plotter Machine. [10]

In [7], [8], it is implied that a CNC plotter is a three-dimensional controlled machine that creates a two-dimensional drawing of an object. It is utilized in a variety of industries, workshops, and factories where complicated designs must be sketched or metal must be cut into precise shapes. A CNC machine’s entire system is huge, expensive, and difficult to transport from one location to another. In his study, a low-cost CNC plotter is proposed as a solution to the problems. To create this system, three-axis controlling units are required to control the position of the X, Y, and Z axes. Two stepper motors control the X and Y axes, while a servo motor controls the Z axis. To operate this machine, a computer was utilized to write and load G-code, which specifies the X, Y, and Z axis coordinates.

 EISSN: 2961-872X • PISSN: 2961-8924 • DOI: 10.56741/esl.v1i02.159

III. Literature Study and Research Methods

In this project, we extract the designated CNC programs to Gcode using the dedicated software, confirmed by the GRBL software. Then, the design process starts with configuring the plotter, adding the laser, and integrating the spindle. The overall flowchart of the design process can be seen in Fig. 6. In Fig. 7, we present the system integration flowchart. First, we design the circuit and algorithm, followed by circuit prototyping. Then, we develop the designated algorithm and evaluate the design process. These steps are then repeated until the desired result is achieved. Once the planning and prototyping process is done, we fabricate the systems and the circuit board. Once again, we conduct the validation process using testing and troubleshooting approaches. Until we ensure that no bugs and errors are found, we calibrate the systems and use the device in real-world applications.



Fig. 6. Study Flow Process.

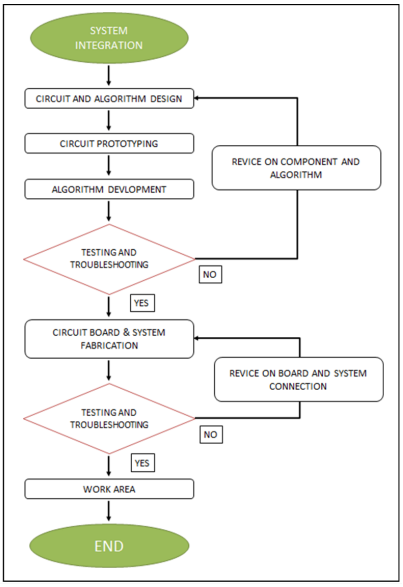

Fig. 7. Design and Implementation Flowchart.

A. Machining Process Study

Machining is the process of cutting, shaping, or removing material from a workpiece using a machine tool. All of our machinings is done using top-of-the-line equipment. A reamer is a tool used in machining to improve the accuracy of existing holes. In this part, using an upgraded CNC router machine helps the process of the study of the spindle, laser, and plotter simultaneously.

Limitations of the machining process are one of the downsides of the machining process analysis. It is because the precision of the components produced is reliant on the operator's efficiency. The machine's inefficiency causes the process to be delayed, resulting in a lack of uniformity in manufacturing. As a result, a complete inspection of the component is necessary. The operator's personal requirements are lowering output rates. Undergoing this study helps us in deriving a study's conclusion, which can be seen by the final results of the process.

B. Spindle

CNC spindle usually refers to the shaft at the center of the machine tool's rotating axis, but it can also refer to the full rotary unit, which includes not just the shaft but also its bearings and anything else attached to it. In the spindle, there are 2 important parts which are the motor and the engraving tool. On a CNC machine, the spindle is a rotating part and requires high accuracy. On the spindle, there is a drill bit that is in direct contact with the workpiece, so it will affect the quality of the workpiece produced by the CNC machine [1].

C. Laser

Laser cutting is a process of cutting certain materials that have a hard and sturdy character using the help of a laser beam whose machine is connected to a computer program. The mentioned materials include metal and non-metal materials. Metal materials include aluminum, metal, wood, steel, stainless steel, and others, while non-metal materials include acrylic, rubber, plastic, marble, synthetic leather, and others.

The results of cutting using a laser beam will be more accurate and neat than cutting manually. The high energy generated by the laser is about 3/4 inch from the surface of the material, which causes the part of the material that is hit by the laser beam to split and cut until it melts and burns.

The laser process is something different compared to the spindle. The way to handle the laser is stricter because if the laser turns on and stays at the same spot for a term, it will make the product burn. This will make the final product results not quite impressive.

D. G-code

G-code is one of the important things in the CNC Router. The CNC cannot be operated if the G-code is not done or if there is a mistake in the coding series. G-code is the most widely used CNC programming language in computer-aided design and production (CAD/CAM) (also known as RS-274). G-code is a metric-based numeric control system for CNC milling machines and other CAM-controlled devices. The study of G-code can be generated from a few software, for example, Solidwork, CATIA, Meshcam, and others. It can be generated after the design is done.

E. X, Y, and Z Axis Calibration

The machine axis step must be calibrated to acquire a precise cut based on the design to get an accurate cut of dimension and measurement. This can be achieved by a few supports from multiple processes or work. There are a few steps to get the best calibrated that have been done, one of which, is by using Solidwork to get the full measurement or interpreting the characteristics of the machine based on the parameter produced by the machine. By using GRBL software, we are able to determine most of the performance metrics of the machine of interest, which in this case is the CNC machine that has been upgraded. Lastly, the results are validated using manual tools such as Vernier Calliper. These steps are conducted to help to get the best Calibration for the X, Y, and Z axes.

In the machine system configuration, the stepper motor step must be adjusted and calibrated. The calibration of the system will be saved in the appropriate configuration. The X, Y, and

Z-axis are calibrated using step per mm, which refers to the number of steps required to travel one millimeter. This step can be tallied using a formula, but it requires the correct measurement step. The old step per mm value can be found in the list of configuration multiples with the desired length in mm per measured length in mm to get a new value of step per mm. The ideal practice for this step is to set the X and Y-axis set points to 100mm in length. For the Z-axis, a depth of 1mm was employed in the calibration step.

IV. Machine Test and Evaluation

A. Calibration Analysis

The calibration of the X, Y, and Z axes is done by measuring the output of the product cut base on the calibration design. The calibration design was made based on a 100 mm internal dimension of the length, 5mm width, and 1mm depth based on the axis to be tested. For the X axis, the drawing is oriented in a horizontal manner and for the Y axis, the drawing is oriented vertically. The workpiece is engraved into 5 samples for each calibration. Each sample is measured three times, and the average value becomes the value to be plotted. For the X and Y axes, the set point of length is 100mm and for the Z axis is a 1mm depth of cut to be measured. The calibration results of X, Y, and Z axes, respectively can be seen in Figs. 8, 9, and 10. As observed, along the calibration iterations, the value reaches the stable calibrated references (i.e., 100). The graphs are drawn from the measurement for every average of the point that is plotted with three calibrations and 5 samples for each calibration reading were taken. The graph shows that the measurement average is improving every time of change on calibration iteration near the set point of length.

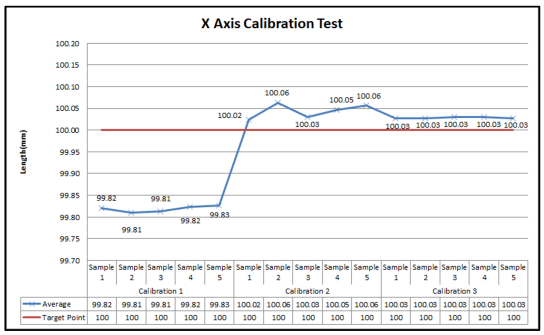

Fig. 8. Calibration Graph of X-axis.

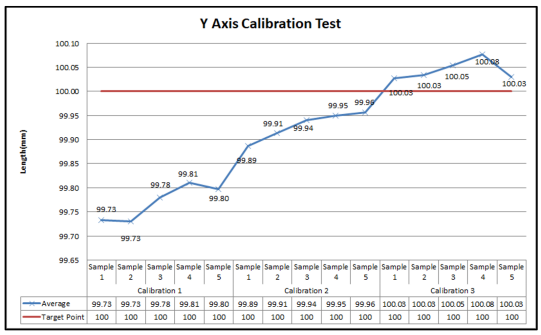

Fig. 9. Calibration Graph of Y-axis.

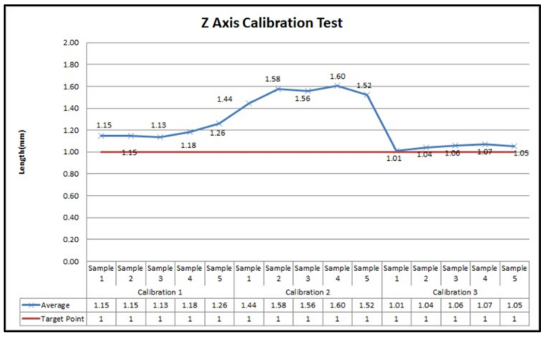

Fig. 10. Calibration Graph of Z-axis.

V. Conclusion

This work outlines a way to merge the spindle, laser, and plotter into one CNC device. The precision of the integrated system has been verified using CAM code, and following the calibration results, we believe that the final product may be used for any milling, laser, engraving, or plotting job. It is worth noting that the MKSDLC board alone is not enough to make the integrated machine robust. To create a robust integrated CNC system in this project, additional circuit and algorithm integrations are performed. However, there are still issues in the project that need to be addressed, which will be discussed under the future Work sub-topic.

Based on the aforementioned research objectives, this project achieved all the objectives that have been stated. For instance, this work proposed, designed, fabricated, and evaluated a low-cost multi-process integrated CNC machine. The proposed system has been evaluated through calibrations and resulting in high-accuracy results. It was a relatively challenging project that required a high level of critical thinking and problem solving, as well as applying a lot of engineering discipline of knowledge in computer programming, electronics circuit, measurement, mechanical components, and CAD and CAM software. However, since this is an interim study, we include only the calibration results for the evaluation process. A further detailed evaluation process and deeper analysis will be published in future works.

VI. Future Works and Recommendations

For future improvements, the machine accuracy, system, and circuit results could be enhanced as follows:

- Create a dedicated PCB board for the circuit.
- Use the self-holding concept for the relay.
- Change the spindle to a higher RPM of the spindle.
- Add on a limit switch for machine homing.
- Deploy machine guarding for safety concerns.
- Attach the vacuum for dust suctions.

References

[1] Rameli, I. M. Sistem Pengaturan Posisi Spindle Pada Mesin Cnc Milling Menggunakan Kontroler Fuzzy-Pd.

[2] Dharmawardhana, M., Ratnaweera, A., & Oancea, G. (2021). STEP-NC Compliant Intelligent CNC Milling Machine with an Open Architecture Controller. *Applied Sciences*, 11(13), 6223.

[3] Baldovino, R. G., & Rogelio, J. P. (2014, November). A Pulse-Width Modulation (PWM) LASER Power Controller for the 3-Axis Computer Numerically-Controlled (CNC) LASER Machine: Support Program for the Productivity and Competitiveness of the Metals and Engineering Industries. In *2014 International Conference on Humanoid, Nanotechnology, Information Technology, Communication and Control, Environment and Management (HNICEM)* (pp. 1-6). IEEE.

 EISSN: 2961-872X • PISSN: 2961-8924 • DOI: 10.56741/esl.v1i02.159

[4] Baldovino, R. G., Rogelio, J. P., Abulencia, G. L., & Macanip, V. Y. (2014, November). Optimization of Machine Process Parameters Through 2D Image Layout Enhancing and Artcam Post-Processing for 3D Machining: Support Program for the Productivity and Competitiveness of the Metals and Engineering Industries. In *2014 International Conference on Humanoid, Nanotechnology, Information Technology, Communication and Control, Environment and Management (HNICEM)* (pp. 1-4). IEEE.

[5] Thomas, D. J. (2013). The Effect of Laser Cutting Parameters on the Formability of Complex Phase Steel. *The International Journal of Advanced Manufacturing Technology*, 64(9), 1297-1311.

[6] Nayak, R., & Padhye, R. (2016). The Use of Laser in Garment Manufacturing: An Overview. *Fashion and Textiles*, 3(1), 1-16.

[7] Hasan, M. M., Khan, M. R., Noman, A. T., Rashid, H., Ahmed, N., & Reza, S. T. (2019, February). Design and Implementation of a Microcontroller-based Low-cost Computer Numerical Control (CNC) Plotter using Motor Driver Controller. In *2019 International Conference on Electrical, Computer and Communication Engineering (ECCE)* (pp. 1-5). IEEE.

[8] Hasan, Y. M., Shakir, L. F., & Naji, H. H. (2018, May). Implementation and Manufacturing of a 3-axes Plotter Machine by Arduino and CNC Shield. In *2018 International Conference on Engineering Technology and their Applications (IICETA)* (pp. 25-29). IEEE.

[9] Lv, Y., Li, C., Jin, Y., He, J., & Li, J. (2021). Energy Saving Design of the Spindle of CNC Lathe by Structural Optimization. *The International Journal of Advanced Manufacturing Technology*, 114(1), 541-562.

[10] Cekus, D., Skrobek, D., & Zajac, T. (2016). A dynamic analysis of an industrial CNC plotter. *Engineering Mechanics*, 2016, 109-109.